Technical Report

No 12

The Phototransformation of Chemicals in Water: Results of a Ring - Test

June 1984

ISSN-0773-8072-12

Technical Report

N° 12

THE PHOTOTRANSFORMATION OF CHEMICALS IN WATER : RESULTS OF A RING - TEST

Brussels, 13 June 1984.

CONTENTS

SUMMARY
A. INTRODUCTION
B. BACKGROUND
C. EXPERIMENTAL TECHNIQUE USED IN THE RING-TEST
1. Chemicals Tested
2. Apparatus
3. Determination of the Incident Light Energy
4. Determination of the Disappearance Quantum Yield
5. Reporting
D. RESULTS OF RING-TEST AND DISCUSSION
1. Results
2. Discussion
2.1. Sources of errors in the ring-test
2.1.1. Reproducibility
2.2.2. Accuracy - systematic errors
2.2. Advantages and disadvantages of different apparatus and light sources
E. CONCLUSIONS
F. APPENDICES
1. Experimental Protocol for Aqueous Photolysis Study
2. Apparatus for Aqueous Photolysis Study
3. Actinometry based on Photo-oxidation of Oxalic Acid
4. Tables
5. Figures
G. BIBLIOGRAPHY
H. MEMBERS OF THE TF PHOTODEGRADATION-2
I. PARTICIPANTS IN THE RING-TEST
J. MEMBERS OF ECETOC SCIENTIFIC COMMITTEE

SUMMARY

In its Technical Report No.3, published in 1981, ECETOC (European Chemical Industry Ecology and Toxicology Centre) discussed experimental methods for assessing the photodegradation of chemicals in the environment and set out the criteria which such methods should meet if they were to be both scientifically adequate and environmentally relevant. For assessing the photodegradability of chemicals present in the aquatic environment it was recommended that a technique developed by the Laboratoire de Photochimie at the University of Clermont-Ferrand, France, be examined in a ring-test.

The results of such a ring-test are presented and discussed in detail in this report. The ring-test was performed in 1982-3 by 12 industrial laboratories and one University laboratory, using a common experimental procedure and slightly different forms of apparatus for determining quantum yields in the phototransformation of 4 reference chemicals in water. Variations in the experimental set-up proved to be less important than adherence to the protocol in producing adequately consistent values of the quantum yield. The report includes a detailed description of the experimental method used.

From the quantum yield the environmental half-life of a chemical can be calculated, and full details of such calculations are given.

A. INTRODUCTION

It is important for providing information on photodegradation for legislative requirements that adequate experimental methods are available. In a previous report ECETOC (1981) has discussed the criteria for scientifically adequate and environmentally relevant methods for assessing the photodegradation of chemicals, and made proposals for developing suitable methods. This work has been continued by a Task Force which was set up "to recommend fundamental and/or development studies needed to develop practical methods valid for the requirements of level 2 of the 6th Amendment to the 1967 Directive on the Classification, Labelling and Packaging of Dangerous Substances (European Communities) covering the photodegradation of chemicals in air and water, in that order of priority and importance". That part of the Task Force's work on phototransformation in water is described in this Technical Report.

B. BACKGROUND

Biodegradation is considered the most likely pathway of elimination of organic chemicals from the aquatic environment. Phototransformation, which occurs mainly near the water surface (to depths of 0.1 m for turbid rivers or about 30 m for the oceans), and hydrolysis, may also be important. An assessment of phototransformation in water is relevant for regulatory purposes only when biodegradation is unlikely to occur.

In water, primary (direct) phototransformations are the main reactions occurring, while secondary reactions involving free radicals (alkoxy radicals, $HO^{\cdot}$,$HO_2^{\bullet}$) and singlet oxygen are generally less important. For direct phototransformation the environmental lifetime, which is the ultimate parameter for assessing the fate of a chemical, can be derived from the experimentally-determined quantum yield, (ϕ), i.e. the number of molecules phototransformed per number of photons absorbed (ECETOC, 1981; Appendix 1). For reactions in water this is an unequivocal parameter, independent of the type and characteristics of the light source used in its determination and considered to be constant in each absorption band.

Quantum yields can be determined in experiments with mono- or poly-chromatic light sources. With monochromatic light the experimental procedure and subsequent calculations are relatively simple but the equipment is rather expensive. With polychromatic light the equipment costs less but the

calculations are more complex. Experiments with polychromatic light also permit an easier determination of quantum yields of substances with low photoreactivity. When the 1981 ECETOC report was written there existed no well-validated method for measuring quantum yields of a chemical in water with polychromatic light, but the Task Force had recommended that for this purpose the experimental technique developed by the Laboratoire de Photochimie of the University of Clermont-Ferrand be assessed in a ring-test. This has now been done, and is described in this report.

The lifetime of a chemical undergoing direct phototransformation in the aqueous environment depends not only on the quantum yield and absorption spectrum of the compound but also on the light intensity and spectral distribution of daylight. Data on these are available for various geographical regions. For any one region the absolute number of incident photons in each spectral range can thus be calculated. From this number, and a knowledge of the quantum yield and light absorption spectrum of the chemical, a theoretical lifetime of this chemical in the top layer of the aqueous system can be calculated (see ECETOC, 1981, p.51). However, the real lifetime of a chemical in an aqueous system also depends on the penetration of light into the water, which in turn depends on a variety of system-related variables. A computer programme, SOLAR (Zepp and Cline, 1977), is available for calculating the lifetime in a particular aquatic system as a function of these system-related variables. Appendix I.D gives examples of the theoretically-calculated lifetimes of the chemicals whose investigation is described in this report, and an example of the calculation of an environmentally more relevant lifetime using the SOLAR programme. Although the use of this programme is necessary for obtaining information on a real, local situation, calculation of the theoretical lifetime is very useful in giving a preliminary estimate of the persistence of a chemical in water.

C. EXPERIMENTAL TECHNIQUE USED IN THE RING-TEST

Thirteen laboratories (cf.section I) using the same experimental protocol participated in the ring-test in 1982 and early 1983. The final protocol presented in this report (Appendices 1,2,3) arose from a consideration of the results from, and comments by, the participants.

1. Chemicals Tested

The following chemicals were used in the study :

i) pentachlorophenol at pH>6,
ii) 2,4-dichlorophenol at pH>6,
iii) 3,4-dichloroaniline at pH>6,
iv) 4-nitrophenol at pHs<2 and ⩾9.

They were chosen to represent simple molecules whose main absorption bands covered the relevant part of the range of daylight wavelengths, and which had a wide range of quantum yields (ϕ). Neutral 3,4-dichloroaniline absorbs mainly at 310 nm, near the lower limit (295 nm) of the daylight range. Anionic 4-nitrophenol absorbs mainly at around 400 nm - chemicals absorbing at higher wavelengths are coloured and their photodegradation would be observable simply by the disappearance of colour. The selected chemicals had values of ϕ covering the range 10^{-1} to 10^{-7}.

Chemicals of high purity were used, but were not always from a common batch - see section D.2.2.2. iii) in which the effect of impurities is discussed.

Other details were specified as follows :

a) concentration in water : 10^{-4} to 10^{-5} mole.litre^{-1};
b) temperature: 20°-40°C; preferably controlled to ± 2°C, and recorded;
c) analytical determinations : UV or high performance liquid chromatography (HPLC);
d) inorganic buffer : optional. The type used should be recorded.

2. Apparatus

Different types of instruments, the majority of which corresponded to the principles laid down in the former report (ECETOC, 1981), were used in the ring-test (cf. Appendix 2 and Table 1 in Appendix 4). The light sources were mercury or xenon arc lamps with suitable optical filters incorporated to eliminate radiation below 295 nm, the ultraviolet radiation cut-off in terrestrial daylight. Some laboratories also performed parallel measurements with monochromatic light.

3. Determination of the Incident Light Energy

The spectral intensity distribution from the lamp/filter combination was determined in two ways: by calculation from the spectral output data supplied by the lamp manufacturer and the measured absorbance of the filter, or by measurement using calibrated spectroradiometers. In one case

a comparison of the data was made, and revealed an acceptable compatibility of results for the two methods, except for the shortest wavelength region where there was some discrepancy.

Absolute incident light intensity was evaluated actinometrically over the wavelength range 300 to 490 nm at the same time as irradiation of the test samples, generally in standard quartz cuvettes of 1 cm pathlength.

4. Determination of the Disappearance Quantum Yield

All participants were asked to follow strictly the indications laid down in the protocol for the final calculation of the quantum yield. (Appendices 1,3)

5. Reporting

Reports were written according to the example given in the protocol (see Appendix 1.C of this report). The layout of tables and figures should be as in tables 10, 11, 12, and 13 (Appendix 4) and figures 1,2,3,4, and 5 (Appendix 5) of the protocol. Any special observations and remarks were added separately.

D. RESULTS OF RING-TEST AND DISCUSSION

1. Results

The results are summarised in Tables 2 to 6 (Appendix 4). The following critical experimental parameters which could have influenced the results are indicated : initial concentration, temperature during the measurement, pH and type of buffer used, analytical method for measuring the concentration of the chemical, and type of light filter. When the disappearance quantum yield was also determined with a monochromatic light source, this was noted. On collating the data it was found that there were slight inconsistencies in the concentration used, the pH of the aqueous buffered solution (acid and alkaline conditions chosen to give neutral molecules and anions respectively) and the temperature during the irradiation.

2. Discussion

2.1. Sources of errors in the ring-test

Two major types of errors are considered : errors which relate to the precision of the method (reproducibility) and systematic errors which relate to the accuracy of the method.

2.1.1. Reproducibility. Results are normally expressed as $x \pm \Delta x$, where Δx is a measure of the reproducibility. The attainment of reproducibility is not in itself proof that an accurate series of measurements has been made, since systematic errors may enter into all the measurements in the series. The following factors influence the reproducibility of the results.

Determination of the rate of disappearance. This rate is calculated from the variation in concentration of the test chemical as a function of time (at least two measurements). The precision of the HPLC determinations (± 5%) or UV-analytical procedure (up to ± 10% when extraction is needed) mainly determines the spread of individual results obtained in any one laboratory.

Determination of the concentration of unreacted actinometer. As this is based on well-established analytical methods, spreads of less than ± 5% are expected.

Measurement of the absorption spectra of the test chemical solution and actinometer solution. With adequate equipment, errors in absorbance of less than ± 5% are expected.

Because of the limited number of results it was impossible to perform a complete statistical analysis. It was nevertheless possible to see from the results that reproducibility was acceptable, regardless of the type of light (poly- or mono-chromatic) and apparatus used (Table 7, Appendix 4), although it might have been expected that, in most cases, a better reproducibility would have been achieved with monochromatic light for which the incident light can be better controlled (cf. Appendix 2).

2.2.2. Accuracy - Systematic errors. Systematic errors giving rise to the observed spread in inter-laboratory results may originate as follows.

i) Errors may result from the assumption that the actual light intensity parameters of the polychromatic lamp conform to the specifications of the manufacturer. This could especially be true for an aged lamp and will have its maximum effect on compounds absorbing only in the 295-330 nm region. These errors may be largely eliminated by determining the emitted light intensity by photometry, which, however, requires rather expensive equipment and adequate practical experience.

An inter-laboratory comparison of quantum yields obtained with polychromatic light was made according to the type of apparatus used (ECETOC, optical bench, and other types; Table 8, Appendix 4). The calculated coefficients of variation are an indication of the accuracy. Tables 8-1 to 8-3 (Appendix 4) give similar coefficients for the results obtained with monochromatic light. It is concluded that the accuracy of the determination is similar for the different types of apparatus and light, despite the limited number of results. The optical bench, however, gave systematically higher quantum yields for those chemicals with a higher ϕ(pentachlorophenol, 2,4-dichlorophenol and 3,4-dichloroaniline).

ii) Errors resulting from a change in the absorption characteristics of the borosilicate filter as a result of further solarisation. It was found during the ring-test that further solarisation changed the spectral light intensity distribution and shifted the cut-off wavelength towards the visible light region (cf. fig. 4, Appendix 5). It was considered that if the absorption band of the solution of the chemical coincided with the cut-off region of the filter, difficulties would be expected in the measurement of the quantum yield. The results obtained (Tables 8, Appendix 4) supported this expectation but the effect was not as significant as expected (e.g. 3,4-dichloroaniline, λ_{max} = 297 nm; nitrophenol pH=2, λ_{max}=262 nm).

Such errors may be eliminated by the use of non-ageing filters (e.g. 305 Schott or Corning long-pass filters) placed before the cuvettes.

iii) Errors may also result from the presence of impurities which may

differ from one sample of test compound to another. This influence was tested by five laboratories who first determined the quantum yield on samples of dichloroaniline obtained from different sources, and afterwards on a sample of identical origin (Koch Light). Mean values for the quantum yield of 0.049 and 0.073 were found, respectively. Considering the normal variation between individual measurements in one laboratory, this indicates that, for this compound at least, impurities had no significant effect.

iv) Errors may also vary according to the absolute value of the quantum yield. The chemicals tested have quantum yields ranging from 0.20×10^{0} to 1×10^{-6}. The results (Tables 8, Appendix 4) indicate that the accuracy of the measurements is about the same over the whole range.

2.2. Advantages and disadvantages of different types of apparatus and light sources.

The most important advantages and disadvantages are summarised in Table 9 (Appendix 4).

E. CONCLUSIONS

Seven types of apparatus (Table 1, Appendix 4) have been used to measure the photolysis quantum yields of 4 chemicals under polychromatic (12 laboratories) and monochromatic (3 laboratories) light, according to a common test protocol. The main absorption bands of the chemicals covered the practically-relevant part of the daylight-wavelength range, and the quantum yields varied between about 10^{-1} and 10^{-6}. The results with both types of light were in good agreement.

The quantum yield is a characteristic property of a chemical when the light distribution is well characterised during its measurement. However, where the light absorbed is near the short-wavelength cut-off a decrease in accuracy of the measured quantum yield is possible, but nevertheless the overall accuracy of such measured quantum yields is sufficient to permit an adequate calculation of the lifetime of a chemical in aqueous solution under specified environmental conditions. As shown in Appendix 1-D the calculated lifetime also depends on the penetration of light into the water and many other factors

which are likely to give larger variations in lifetime than does the inaccuracy in determining quantum yield.

The reproducibility and accuracy of quantum yields obtained with the ECETOC/University of Clermont-Ferrand apparatus with polychromatic light (6 laboratories) were similar to or better than those obtained with monochromatic light (3 laboratories). The accuracy was improved by the use of non-solarising, long-pass filters placed before the cuvettes.

Two apparatuses (laboratories L and M), in principle similar to the ECETOC apparatus, gave results with similar reproducibility and accuracy. One apparatus (laboratory K) did not fully conform to the criteria laid down for the ring-test, although it gave acceptable quantum yields. In such apparatuses in which the light geometry is not well-defined, the measurements on compounds with more than one main absorption band will present problems. The conventional optical bench apparatus with polychromatic light gave quantum yields of similar reproducibility but of somewhat higher values for those chemicals with a higher ϕ . The disadvantage of this apparatus is that the experiments take longer to perform.

A disadvantage of the methods with polychromatic light is that the calculation is more complicated , but this can be overcome by the use of a desk-top computer. Calculation is easier for the method with monochromatic light, but the higher cost of the equipment will limit its use to those laboratories which specialise in photochemistry. For chemicals which absorb weakly or have small quantum yields, the light intensity available from the monochromator needs to be especially high. The principal advantages of the use of the ECETOC and similar apparatuses with polychromatic light are : the relatively low cost, the shorter duration of the experiments and the possibility to determine the quantum yield of substances with low photoreactivity.

The protocol presented in this report is recommended for determining the quantum yield of direct phototransformation, and hence the calculated environmental lifetime, of a chemical in water under specified environmental conditions, when such data are required for the legislatory notification of a chemical.

F. APPENDICES

APPENDIX 1 : EXPERIMENTAL PROTOCOL FOR AQUEOUS PHOTOLYSIS STUDY

A. PRINCIPLE OF METHOD

B. DEFINITIONS AND UNITS
   1. Photolytic Lifetime
   2. Quantum Yield
   3. Einstein
   4. Molar Extinction Coefficient
   5. Light Absorption and Light Transmission Intensities

C. MEASUREMENT OF QUANTUM YIELD
   1. Equipment
   2. Procedure
      2.1. Preparation of materials
      2.2. Determination of the quantum yield
         2.2.1. With polychromatic light
         2.2.2. With monochromatic light
      2.3. Reporting

D. CALCULATION OF THE LIFETIME OF A CHEMICAL
   1. Theoretical lifetime
   2. Environmental lifetime

A. PRINCIPLE OF METHOD

The method is designed to measure the quantum yield ϕ of direct photolysis of a chemical in aqueous solution. The quantum yield can then be used to estimate the lifetime of the chemical in the aquatic environment.

B. DEFINITIONS AND UNITS

1. Photolytic Lifetime

The lifetime (τ) of a photodegradable compound under sunlight, and in a solution of low absorbance (where the absorbed light intensity is proportional to the concentration) can be calculated from the formula :

$$\tau = \frac{1}{k} = \frac{1}{2300 \int_{\lambda_1}^{\lambda_2} \phi . I_o(\lambda) . \varepsilon(\lambda) . d\lambda} \qquad (I)$$

Many authors use the term half-life ($t_{1/2}$) which is defined by

$$t_{1/2} = \ln 2 . \tau = 0.7 \times \tau .$$

k	is the pseudo-first-order rate constant of direct photolysis in s^{-1}
ϕ	is the quantum yield of disappearance under excitation extending from λ_1 to λ_2 nm in mole.einstein^{-1}
$I_o(\lambda)$	is the intensity of incident light of wavelength λ expressed in einstein.cm^{-2}.s^{-1}.nm^{-1}
$\varepsilon(\lambda)$	is the molar extinction coefficient at wavelength λ expressed in litre.mole^{-1}.cm^{-1}
τ	is the lifetime in seconds.
2300	takes into account the conversion of litres into cm^3 and of decadic molar extinctions into a Napierian basis.

The lifetime of a chemical in water can therefore be calculated from its quantum yield, its molar extinction coefficient and the known intensities of natural daylight. It depends, additionally, on several other environmental variables which are described in section D.

2. Quantum Yield (ϕ)

The quantum yield of disappearance is defined as the number of moles reacting per number of einsteins absorbed (i.e. number of molecules reacting per number of photons absorbed). It is calculated from an experimentally-determined rate of disappearance of the irradiated compound and from the total amount of light energy absorbed during the irradiation.

$$\phi = \frac{R}{10^{3}\int_{\lambda_1}^{\lambda_2} \overline{I_a(\lambda)}.d\lambda} \qquad \text{(II)}$$

where R = rate of disappearance of the irradiated compound in mole.litre^{-1}. s^{-1}

$\overline{I_a(\lambda)}$ = the mean value of the absorbed light intensity at a wavelength λ(nm) in einstein.cm^{-3}.s^{-1}.nm^{-1}

10^{-3} = constant for converting mole.litre^{-1}.s^{-1} to mole.cm^{-3}.s^{-1}

3. Einstein

This is a unit of energy equal to the energy of N photons (N = Avogadro's number). It is not a constant, as are the classical energy units, but is wavelength-dependent.

$$1 \text{ einstein} = \frac{N.h.c}{\lambda(cm)} = \frac{119.7\times10^{6}}{\lambda(nm)}.\text{Watt.s} \qquad \text{(III)}$$

where N = number of molecules per mole = 6.022×10^{23} (Avogadro's number)

$\frac{hc}{\lambda}$ = the energy of one photon with wavelength λ in cm.

h (Planck constant) = 6.626×10^{-34} Joule.s

c (light velocity) = 3×10^{10}cm.s^{-1}

λ (cm) = $10^{-7} \times \lambda$ (nm)

1 Watt = 1 Joule.s^{-1}

4. Molar Extinction Coefficient, $\varepsilon(\lambda)$.

According to the Beer-Lambert law :

$$\varepsilon(\lambda) = OD(\lambda).\ell^{-1}.C^{-1} \qquad \text{(IV)}$$

expressed in litre.mole^{-1}.cm^{-1} where

OD (λ) = absorbance or optical density at wavelength λ

ℓ = optical path, identical to cell pathlength in cm

C = concentration of the chemical in mole.litre^{-1}

5. Light Absorption and Light Transmission Intensities

When incident light of intensity $I_i(\lambda)$ at a wavelength λ(nm) passes through a filter or other light-absorbing medium with absorbance OD(λ) at a wavelength λ, the transmitted light intensity per unit surface $I_t(\lambda)$ is calculated from

$$I_t(\lambda) = I_i(\lambda).10^{-OD(\lambda)} \qquad \text{(V)}$$

and is expressed in photons.cm^{-2}.s^{-1}.

The absorbance OD(λ) is measured with a spectrophotometer.

The absorbed light intensity per unit volume $I_a(\lambda)$ is calculated from

$$I_a(\lambda) = \frac{1}{\ell}\left[I_i(\lambda) - I_t(\lambda)\right] = \frac{I_i(\lambda)}{\ell}\left[1 - 10^{-OD(\lambda)}\right] \qquad \text{(VI)}$$

and is expressed in photons.cm^{-3}.s^{-1}, with ℓ the optical path expressed in cm.

The absorption of a solution is then defined as $\dfrac{I_a(\lambda).\ell}{I_i(\lambda)}$

The transmittance is defined as $T = 1 - \dfrac{I_a(\lambda).\ell}{I_i(\lambda)} = \dfrac{I_t(\lambda)}{I_i(\lambda)}$

C. MEASUREMENT OF QUANTUM YIELD

1. Equipment

Photolysis apparatus. An apparatus is required which permits the irradiation by polychromatic or monochromatic light of at least 2 dimensionally-similar quartz cuvettes containing the solution of the chemical or an actinometer. A "merry-go-round" system is used to ensure uniform irradiation of all the cuvettes.

If monochromatic light is used, only a knowledge of the light intensity at the wavelength produced by the source is required. If a polychromatic source is used a knowledge of the relative energy distribution across the wavelength spectrum of the lamp is required, in which case a filter system is needed to eliminate wavelengths below 295 nm. When borosilicate filters are used, they should be solarised and their absorption spectrum should be checked regularly. Appendix 2 contains more details about some types of equipment at present available. Whatever apparatus is used it should be ensured that the sample and actinometric solutions receive equal amounts of radiation.

The effect of temperature on photolysis reactions is usually considered as minimal. However, Barltrop and Coyle (1975) found that some photochemical reactions may be temperature-dependent, and therefore some temperature control is necessary.

To eliminate errors due to loss of the chemical or water by evaporation, the use of air-tight sealed cuvettes is recommended.

Spectrophotometer. Any conventional double-beam spectrometer with an operating band-pass of at least 2 nm may be used .

Analytical equipment. A method for measuring the concentration of the chemical in aqueous solution is required. Normally, High Performance Liquid Chromatography is the method of choice.

2. Procedure

2.1. Preparation of materials

Test chemical. The chemical should be of purity >98% where possible and contain no significant amounts of highly light-absorbing impurities. The absorption spectrum over a range of pHs should be recorded. If the

spectrum is pH-sensitive, irradiation will need to be carried out under buffered conditions over a range of environmentally relevant pHs. A standard solution of the chemical is used at a concentration where an apparent first order phototransformation will occur, e.g. 10^{-3} to 10^{-5} mole.litre^{-1}, in distilled water (buffered if required). Acetonitrile (up to 1%) may be used as co-solvent to aid dissolution.

Actinometer. Many chemical actinometers are available (Pitts et al.,1966) but the uranyl sulphate or nitrate photocatalysed oxidation of oxalic acid is considered particularly suitable in this procedure because the quantum yield of this reaction is almost constant over the relevant wavelength range (average ϕ = 0.56, from λ = 290 to 490 nm), and the disappearance rate can be easily measured. The actinometer solution is made up from 0.05 mole.litre^{-1} oxalic acid and 0.01 mole.litre^{-1} uranyl sulphate. The procedure for determining the rate of disappearance of oxalic acid is described in Appendix 3.

2.2. Determination of the quantum yield

The experimental technique will vary according to whether the light is polychromatic or monochromatic.

2.2.1. With polychromatic light. To calculate the quantum yield (cf. equation II) the rate of disappearance (R) and the computed total absorbed light intensity

$$\int_{\lambda_1}^{\lambda_2} \overline{Ia(\lambda)}.d\lambda \qquad \text{(VII)}$$

must be known.

a) Determination of the rate of disappearance (R). The concentration of the test chemical in the cuvettes is determined after suitable periods of irradiation. A semi-log plot of concentration versus time of irradiation should yield a straight line for the period of irradiation where apparent first-order kinetics are obeyed. A value of R for calculating the quantum yield should be taken only from the linear portion of this plot. R is expressed in molecules.cm^{-3}.s^{-1}. (1 mole.litre^{-1} = 6.022x10^{20} molecules.cm^{-3}).

b) Determination of the "absolute" value of the available incident

light. The total amount of absorbed light responsible for the photolysis of the chemical is computed from the absolute value of the available incident light intensity and the fraction of this light intensity absorbed by the chemical.

i) Available incident light intensity. It is first necessary to know the "relative" distribution of energy across the spectral emission of the lamp in the wavelength range from 290 nm upwards, expressed in 10 nm waveband intervals. This information can be obtained either directly from the lamp manufacturer's Technical Notice, or by direct measurement via photometry. If the data obtained are expressed in $mW.m^{-2}.10\ nm^{-1}$, they should be converted into einsteins by use of the equation

$$I_{ro}(\lambda) = \frac{W.\lambda}{119.7}.10^{-9} \quad \text{(cf.Definitions and Units-(III))}$$

where $I_{ro}(\lambda)$ = emitted light intensity at wavelength λ to $(\lambda + 10)$ in $einstein.m^{-2}.s^{-1}.10\ nm^{-1}$

W = the emitted light intensity at wavelength λ to $(\lambda + 10)$ in $mW.m^{-2}.10\ nm^{-1}$

Where manufacturer's data are used, the converted relative energy distribution must be corrected for the absorption characteristics of the filter for each 10 nm waveband, by the following equation :

$$I_{rt}(\lambda) = I_{ro}(\lambda).10^{-OD_{F_\lambda}} \qquad \text{(V)}$$

where OD_{F_λ} is the absorbance of the filter at wavelength λ to $(\lambda + 10)$. $I_{rt}(\lambda)$ determines the "relative" value of the available light intensity incident on the cuvettes. If a photometer is available which permits direct measurement of an emission spectrum, this measurement can obviously be made on the light after filtering. The measured values are then converted into $einstein.m^{-2}.s^{-1}.10\ nm^{-1}$.

The following data (1-4) are collected for every 10 nm spectral band in a first table (cf. Table 10, Appendix 4) :

(1) The "relative" distribution of the light intensity, $I_{ro}(\lambda)$,

obtained from the lamp manufacturer, expressed in $mW.m^{-2}.s^{-1}.10\ nm^{-1}$.

(2) $I_{ro}(\lambda)$ expressed in $einstein.m^{-2}.s^{-1}.10\ nm^{-1}$ (cf. eq.III)

(3) the ratio of light incident on and transmitted through the filter

$$\frac{I_{rt}(\lambda)}{I_{ro}(\lambda)} = 10^{-OD_{F_\lambda}} \qquad \text{(VIII)}$$

calculated from the absorption spectrum of the filter.

$$OD_{F_\lambda} = f(\lambda)$$

(4) the "relative" value of available light intensity incident on the cuvette, $I_{rt}(\lambda)$ in $einstein.m^{-2}.s^{-1}.10\ nm^{-1}$.

$$I_{rt}(\lambda) = I_{ro}(\lambda).\frac{I_{rt}(\lambda)}{I_{ro}(\lambda)} = (2)x(3) \qquad \text{(IX)}$$

These latter values may be obtained directly when a photometer is available to measure the light intensity after filtering. The measured values should then be converted into $einstein.m^{-2}.s^{-1}.10\ nm^{-1}$.

ii) Determination of the "absolute" value of the light energy available for photolysis. The total amount of absorbed light intensity per unit volume defined by :

$$\int_{290}^{490} I_a(\lambda).d\lambda \qquad \text{(X)}$$

in $photons.cm^{-3}.s^{-1}$ is determined by actinometry (cf.Appendix 3) and is used to calculate the "absolute" value of the available light $I_t(\lambda)$ for every 10 nm spectral band. With the uranyl sulphate/oxalic acid actinometer the light is totally absorbed up to 340 nm. At longer wavelengths only a partial absorption occurs until 490 nm (see figure 1, Appendix 5). An important correction is therefore necessary to determine the exact value of the

available light intensity $I_t(\lambda)$ between 300 and 490 nm from the total absorbed light. This correction is calculated for each 10 nm spectral band from the absorbance $(OD)_A$ of the actinometer (A).

In a second table (cf. Table 11, Appendix 4) the following data (4-9) are collected for every 10 nm spectral band.

(4) the "relative" value of the available light intensity, $I_{rt}(\lambda)$, now expressed in einstein.cm^{-2}.s^{-1}.10 nm^{-1}, taken from table 10.

(5) the fraction of light absorbed by the actinometric solution (or the so-called absorption of the actinometric solution)

$$\left[\frac{I_{ra}(\lambda).\ell}{I_{rt}(\lambda)}\right]_A = 1 - 10^{-OD_A} \qquad \text{(XI)}$$

where ℓ = optical path in cm

(6) the "relative" value of the absorbed intensity computed as

$$I_{ra}(\lambda) = I_{rt}(\lambda).\frac{1}{\ell}\left[\frac{I_a(\lambda).\ell}{I_t(\lambda)}\right]_A \qquad \text{(XII)}$$

The sum of all $I_{ra}(\lambda)$ values for each 10 nm spectral range from 290 to 490 nm is

$$\int_{290}^{490} I_a(\lambda).d\lambda \qquad \text{(XIII)}$$

This value should not be confused with the absolute value of the total amount of absorbed light energy, which is obtained by actinometry.

(7) The ratio P of the absorbed intensity in each spectral band, calculated from the relative values

$$P = \frac{I_{ra}(\lambda)}{\int_{290}^{490} I_{ra}(\lambda).d\lambda} = \frac{(6)}{\Sigma(6)} \qquad \text{(XIV)}$$

(8) The "absolute" value of the absorbed intensity in each wavelength range calculated as

$$I_a(\lambda) = P.\int_{290}^{490} I_a(\lambda).d\lambda \qquad \text{(XV)}$$

in which

$$\int_{290}^{490} I_a(\lambda).d\lambda \qquad \text{(X)}$$

is obtained from the actinometric measurement. $I_a(\lambda)$ is expressed in photons.$cm^{-3}.s^{-1}.10\ nm^{-1}$, and is identical to the amount of light absorbed in a volume per unit time per 10 nm spectral range (cf. Appendix 3).

(9) The "absolute" value of the available light, $I_t(\lambda)$ in each spectral range, calculated from

$$I_t(\lambda) = \frac{I_a(\lambda).\ell}{1 - 10^{-OD_A}} = \frac{(8).\ell}{(5)} \qquad \text{(XVI)}$$

$I_t(\lambda)$ is a photon flux and is expressed in photons.$cm^{-2}.s^{-1}.10nm^{-1}$. The calculation of $I_t(\lambda)$ is consistant only if the absorbance and the actinometric measurements are carried out in cuvettes with equal pathlengths.

c) Determination of the total light intensity absorbed by the chemical under investigation. As the photoproducts often absorb in the same spectral range as the parent compound, it is necessary to correct the total absorbed light energy for the part absorbed by the photoproducts. The absorption spectrum of the solution is

measured prior to irradiation (t=0). Similarly, an absorption spectrum is obtained from the solution after an irradiation time t, and absorbance values OD_c^t are obtained at the same wavelength intervals.

In a third table (cf.Table 12, Appendix 4) the following values (10-14) are collected :

(10) OD_c^o : the absorbance of the solution of the chemical at λ (nm) before irradiation (t=0).

(11) OD_c^t : the absorbance of the solution of the chemical at λ (nm) after an irradiation time t .

(12) the value of the absorption at time = 0

$$\left[\frac{I_a(\lambda).\ell}{I_t(\lambda)}\right]_o = 1 - 10^{-OD_c^o} \qquad \text{(XVII)}$$

(13) the value of the absorption after irradiation time t, computed from the formula which takes into account the absorption of the photoproducts :

$$\left[\frac{I_a(\lambda).\ell}{I_t(\lambda)}\right]_t = (1 - 10^{-OD_c^t}).\ \frac{OD_c^o}{OD_c^t}\ .\ \frac{C_t}{C_o} \qquad \text{(XVIII)}$$

C_o and C_t are the concentration of the chemical at t=o and t = time of irradiation, respectively.

(14) the mean value of the absorption during the irradiation period is calculated from :

$$\left[\frac{I_a(\lambda).\ell}{I_t(\lambda)}\right]_{o-t} = \frac{1}{2}\left[\left[\frac{I_a(\lambda).\ell}{I_t(\lambda)}\right]_o + \left[\frac{I_a(\lambda).\ell}{I_t(\lambda)}\right]_t\right] \qquad \text{(XIX)}$$

In a final table, 13 (Appendix 4), the following values (15-17) are recorded for every 10 nm spectral band.

(15) the spectral range.

(16) a mean value of the absorbed intensity in every spectral range and during the irradiation time, calculated from :

$$\left[\frac{I_a(\lambda).\ell}{I_t(\lambda)}\right]_{o\to t}^{\lambda\to(\lambda+10)} = \frac{1}{4}\left[\left[\frac{I_a(\lambda).\ell}{I_t}\right]_{o\to t}^{\lambda} + \left[\frac{I_a(\lambda).\ell}{I_t}\right]_{o\to t}^{(\lambda+10)} + 2.\left[\frac{I_a(\lambda).\ell}{I_t}\right]_{o\to t}^{(\lambda+5)}\right] \quad (X$$

(9) $I_t(\lambda)$, the absolute value of the available light intensity expressed in photons.$cm^{-2}.s^{-1}.10\ nm^{-1}$, taken from Table 11.

(17) $\overline{I_a(\lambda)}$, the mean value of the absorbed intensity calculated as :

$$\overline{I_a(\lambda)} = I_t(\lambda).\ \frac{1}{\ell}\left[\frac{I_a(\lambda).\ell}{I_t(\lambda)}\right]_{o\to t}^{\lambda\to(\lambda+10)} \qquad \text{(XXI)}$$

The sum of all the $I_a(\lambda)$ values over the spectral range in which the chemical absorbs is equal to the total absorbed light intensity expressed in photons.$cm^{-3}.s^{-1}$.

$$\int_{\lambda_1}^{\lambda_2} \overline{I_a(\lambda)}.d\lambda \qquad \text{(VII)}$$

d) Calculation of quantum yield. The quantum yield over the spectral range $\lambda_1 \to \lambda_2$ is calculated from :

$$\left[\phi\right]_{\lambda_2}^{\lambda_1} = \frac{\Delta C}{\Delta t}.\ \frac{N}{1000\int_{\lambda_1}^{\lambda_2} \overline{I_a(\lambda)}.d\lambda} \qquad \text{(XXII)}$$

where ΔC is the number of moles.$litre^{-1}$ of the compound disappearing after Δt seconds irradiation, $N = 6.022 \times 10^{23}$, $\int_{\lambda_1}^{\lambda_2} \overline{Ia(\lambda)}.d\lambda$ is expressed in photons. $cm^{-3}.s^{-1}$, and the factor 1000 accounts for the conversion of litre into cm^3.

2.2.2. With monochromatic light. The quantum yield is determined at a specific wavelength λ_i. Equation II is simplified to

$$\phi(\lambda_i) = \frac{R}{\overline{I_a(\lambda_i)}} \qquad \text{(XXIII)}$$

where R is the rate of disappearance of the irradiated compound in molecules.cm^{-3}.s^{-1} (see 2.1.1) and $\overline{I_a(\lambda_i)}$ is the mean absorbed light intensity of the compound in solution at the monochromatic wavelength λ_i in photons.cm^{-3}.s^{-1}.

$$\overline{I_a(\lambda_i)} = \frac{I_i(\lambda_i)}{\ell}\left[1-10^{-OD_c(\lambda_i)}\right] \qquad \text{(VI)}$$

$OD_C(\lambda)$ = optical density of the compound in solution at wavelength λ_i

ℓ = optical pathlength in cm

The incident light intensity $I_i(\lambda_i)$ is determined by actinometry from

$$I_i(\lambda_i) = \frac{N.\Delta A}{\Delta t.\phi_A}.\ell\left[1-10^{-OD_A(\lambda_i)}\right]^{-1} \qquad \text{(VI)bis}$$

which gives

$$\overline{I_a(\lambda_i)} = \frac{N.\Delta A}{\Delta t.\phi_A}.\frac{1-10^{-OD_c(\lambda_i)}}{1-10^{-OD_A(\lambda_i)}} \qquad \text{(XXIV)}$$

N = 6.022×10^{23} (Avogadro's number).

ΔA = the number of moles per cm³ of actinometer which disappear during irradiation of the actinometric solution.

Δt = the irradiation time in seconds.

OD_A = optical density of the actinometer at wavelength λ_i

ϕ_A = the disappearance quantum yield of the actinometer at wavelength λ_i.

Care should be taken that the pathlengths for irradiations of the compound and actinometric solutions are equal.

Different wavelengths can readily be selected for investigating the wavelength-dependence of the disappearance quantum yield when the compound exhibits different absorption bands. It is also useful for

the study of compounds with a sharply falling light-absorption edge close to 295 nm (e.g. 3,4-dichloroaniline, λ_{max} = 297 nm).

2.3. Reporting

This is illustrated by a practical example.

Aqueous Photolysis Experiment :
Determination of Quantum Yield

Test compound : pentachlorophenol (>99% purity)
absorption spectrum (see fig.2, Appendix 5)
pKa = 4.8

Apparatus

ECETOC - apparatus

Light source : polychromatic, OSRAM-HVI-400 W; emission spectrum, fig.3 (Appendix 5).

Borosilicate filter : absorption spectrum, fig.4 (Appendix 5).

Cuvettes : 1 cm pathlength.

Actinometer : uranyl sulphate/oxalic acid.

Experimental conditions.

C_o = concentration of pentachlorophenol at zero time = 2.00×10^{-4} mole.litre^{-1}.

Actinometric solution = 0.01 mole.litre^{-1} uranylsulfate + 0.05 mole.litre^{-1} oxalic acid.

Buffer system for pentachlorophenol solution : borate buffer, pH = 9 (Merck Titrisol).

Temperature during irradiation : 30°C ± 2°C.

Analytical method for oxalate determination : titration with $KMnO_4$.

Determination of disappearance of pentachlorophenol in aqueous solution:

- by spectrophotometry, after extraction by cyclohexane following each irradiation run
- or by HPLC (preferred method).

HPLC device and pump	: HP 1084 B
Column	: Hypersil SAS, length 25 cm, i.d. 5 mm
Mobile phase	: 52% methanol, 48% aqueous Pic A solution (Pic A is an ion-pairing reagent from Waters Ass.)
Flow rate	: 1.2 ml/min
Detector	: UV 225 nm
Recorder	: HP-terminal
Injection volume	: 10 µl

Results

a) Determination of disappearance rate R, obtained by spectrophotometry :

Irradiation time in min.	0	2	3	5	7	10	15
pentachlorophenol in mole.litre^{-1} x 10^4	2.00	1.90	1.85	1.74	1.64	1.48	1.10

See figure 5 (Appendix 5).

b) Determination of the relative light intensity, (Table 10 - Appendix 4).

c) Actinometric measurements.

ΔA = Number of moles of oxalic acid in 2 ml solution disappearing after Δt (5 minutes irradiation) = 2.8×10^{-5} mole.2 cm^{-3}.

Thus the number of photons absorbed by 1 ml actinometric solution per second is 5.0×10^{16} photons.cm^{-3}.s^{-1} (see Appendix 3).

d) Determination of the absolute value of the available light $I_{rt}(\lambda)$ in each spectral range (10 nm interval) (table 11 - Appendix 4).

e) Determination of mean values of absorption by the test solution (table 12 - Appendix 4).

f) Calculation of total absorbed light intensity $\int_{290}^{360} \overline{I_a(\lambda)}.d\lambda$ (table 13 - Appendix 5).

g) Calculation of quantum yield.

$$\phi = \frac{\Delta C}{\Delta t} \cdot \frac{N}{1000 \int_{290}^{360} \overline{I_a(\lambda)}.d\lambda} \qquad \text{(XXII)}$$

$N = 6.022 \times 10^{23}$

ΔC in mole.litre^{-1} after 5 minutes irradiation
$= 2.0 \times 10^{-4} - 1.74 \times 10^{-4} = 0.26 \times 10^{-4}$.

$t = 5 \times 60$ s.

$$\int_{290}^{360} \overline{I_a(\lambda)}.d\lambda = 0.55 \times 10^{16} \text{photons.cm}^{-3}.\text{s}^{-1} \text{(Table 13)}$$

$$\phi = \frac{0.26 \times 10^{-4} \times 6.022 \times 10^{23}}{5 \times 60 \times 0.55 \times 10^{16} \times 10^{3}} = 0.009$$

D. CALCULATION OF THE LIFETIME OF A CHEMICAL.

1. Theoretical Lifetime

The pseudo first-order rate constant for direct phototransformation (k), and thus the lifetime (τ) of a chemical in water, can be computed (ECETOC 1981, p.51; Zepp and Cline, 1977) from :

a) the experimentally-determined quantum yield of disappearance of the compound upon excitation;
b) the experimentally determined light absorption spectrum of the compound in aqueous solution at above 290 nm, which is the lower spectral limit of sunlight reaching the earth's surface;
c) the solar light intensity available in the spectral range which coincides with the light absorption spectrum of the compound;

$$\tau = \frac{1}{k}$$

$$k = \phi\, k_a$$

$$k_a = \Sigma_{\lambda_1}^{\lambda_2}\ 2.303 \times 10^3 . I_o(\lambda) . \Delta\lambda . \varepsilon(\lambda)$$

where τ is the lifetime (s). Some authors use the term half-life ($t_{1/2}$) which is defined as $t_{1/2} = \ln 2 . \tau$,

k = is the pseudo-first-order rate constant for direct photolysis (s^{-1}),

ϕ is the quantum yield of disappearance upon excitation for the wavelength range λ_1 to λ_2(mole.einstein^{-1}),

k_a is the pseudo first-order rate constant for light absorption (s^{-1}),

$I_o(\lambda)$ is the incident sunlight intensity at wavelength λ (einstein.cm^{-2}.s^{-1}.nm^{-1}),

$\Delta\lambda$ is the wavelength range (nm),

$\varepsilon(\lambda)$ is the molar extinction coefficient,(litre.mole^{-1}.cm^{-1}),

2.303 is ln 10, i.e. the factor for conversion of decadic molar extinction coefficients of the compound into a Napierian basis,

10^3 is the factor for conversion of $\varepsilon(\lambda)$ from litre.mole^{-1}.cm^{-1} into cm^3.mole^{-1}.cm^{-1}.

The results of such calculations for the compounds studied in the ring test are presented in Tables 15 and 16 (Appendix 4). The sunlight intensities (see Table 14 - Appendix 4) used for these calculations are yearly- averaged, mid-day, sunlight intensities, corrected for reflection from the water surface for latitude 40 to 50 degrees north (in Europe this region lies approximately between Rome and Amsterdam). These light-intensity data are derived using the computer programme SOLAR (Zepp and Cline, 1977).

2. Environmental Lifetime

The lifetimes calculated as in Table 16 (Appendix 4) are valid only for direct phototransformation, for mid-day sunlight conditions, in the top millimeters of a natural aquatic system. They can be used for a rough estimation of the persistence of a chemical being irradiated. To calculate the real lifetime of a compound in the whole of such an aquatic system, a variety of system-related parameters, discussed below, have to be taken into account.

There are two types of factors which determine the sunlight intensities available for direct photolysis in water :

- those which determine the solar light intensity incident upon the upper layer of the water(these factors are already partly taken into account);
- those which determine the penetration of light into the water.

The main factors in the first category are : latitude, season, time of day and refractive index of the water, and when these are taken into account a theoretical estimate of the solar light intensity incident upon the surface layer of the water can be made. This light intensity is governed locally also by the ozone layer thickness, the cloud cover, the concentration of aerosols and solid particles in the air and the presence of air-borne gaseous contaminants, and these would have to be taken into account in a more refined treatment.

The second group of factors are: the light attenuation of the water, the concentration of suspended solids, the vegetation cover and the depth of the water system.

For calculating the expected lifetime of a chemical undergoing direct photolysis in water, and for taking into account the more important parameters described above, a computer programme is essential. The only suitable programme available for that purpose is SOLAR, developed by Zepp and Cline (1977) of the United States Environmental Protection Agency. With this programme the full-day-averaged, pseudo-first-order rate constant of direct photolysis of a chemical in water is calculated as a function of the properties of the compound (quantum yield, light absorption spectrum), of the light intensity (latitude, season, ozone layer thickness), and of the properties of the water (refractive index, light absorption spectrum, depth). The programme does not account for cloud cover, concentration of aerosols, water vapour and gaseous contaminants in the air, or suspended solids and vegetation cover in water.

The reliability of predicted lifetimes obtained from SOLAR has been tested in outdoor experiments, and in all cases the predictions were found to be in good agreement with the experimental results (Zepp and Cline, 1977; Mill et al.,1981; Wilmes, unpublished results; Crossland & Wolff, in press). As an example, a comparison of predicted and experimental rates of photo-transformation of pentachlorophenol (PCP) in outdoor ponds is presented below (Crossland and Wolff, in press). In order to demonstrate the sensitivity of the photolytic process to the system-related parameters the calculations are performed step by step.

a) In the surface layer of the ponds (layer thickness 1×10^{-7} m), the full-day-averaged lifetime of PCP (quantum yield used = 0.017), is calculated from the light absorption spectrum of the compound to be 0.01 day. In these calculations the actual location of the ponds (50° northern latitude) and the season (spring) during which the experiments were performed were taken into account (cf. Table 16 - Appendix 5).

b) When the depth of the ponds and the light attenuation of the water are taken into account, the lifetime is calculated to be 1.4 to 2.8 days, the range resulting from differences in the light attenuation of the water in the various ponds.

c) Finally, the above value is corrected for the cloud cover (60%, averaged for the whole experimental period) using the empirical relationship of Mo and Green (1974) which gives a final predicted lifetime of 2.2. to 4.4 days (200 to 400 times the theoretical lifetime as calculated under a)). The less important factors which can influence the solar light intensity available in the water are not further considered. The predicted lifetime of 2.2 to 4.4 days is in good agreement with the experimentally determined value for PCP in outdoor ponds, viz. 2.9 to 6.7 days.

Insofar as the outdoor measurements were made in experimental ponds, the lack of turbulence may lead to some error in the prediction when applied to chemicals in rivers or seas.

APPENDIX 2 : APPARATUS FOR AQUEOUS PHOTOLYSIS STUDY

The 13 participants in the ring-test (see section I) were coded A-M, and are referred to by their code letter throughout the text and in Tables 1 to 8, Appendix 4.

A. WITH POLYCHROMATIC LIGHT

1. ECETOC Apparatus

This apparatus was designed by Prof. Lemaire and co-workers of the University of Clermont-Ferrand. The schematic set-up is given in figure 6 (Appendix 5). It is a compact (40x36x36 cm) and simple apparatus based on the merry-go-round principle. Samples are contained in 12 dimensionally-similar standard quartz cuvettes of 1 cm optical path length, which turn around a centrally-located medium-pressure mercury arc lamp. The disposition of the lamp and cuvettes is such that the latter are all similarly irradiated by a quasi-parallel incident light beam (distance about 13 cm). The set-up permits the simultaneous irradiation of sample and actinometric solutions.

Two light-filter arrangements are possible : the lamp may be surrounded by a solarised (at least 10 h irradiation) borosilicate tube filter (e = 1.5 mm), or by a quartz tube and non-ageing 50 x 50 mm square filters (e.g. 305 nm Corning or Schott long-pass filter) placed in holders immediately in front of the cuvettes. The latter arrangement is less sensitive to possible changes in the wavelength cut-off as a result of intensive irradiation. When a borosilicate filter is used its absorption spectrum should be checked regularly.

The inside walls of the device are blackened to avoid any reflection. The apparatus is cooled by three fans to keep the temperature of the samples in the cuvettes at below 35°C. Since the round robin exercise was performed, small-sized black light sources which reduce the warming up of the apparatus have become available.

2. Optical Bench Apparatus

Such an apparatus is shown diagrammatically in Figure 7 (Appendix 5). The light source is a medium-pressure mercury discharge lamp, which is focussed by a lens, via a filter, onto the face of quartz cuvettes held in a merry-

go-round system. The quartz-filter cells can be filled with suitable filtering solutions if required, or a square filter can be used (borosilicate filter or preferably 305 long-pass filter). During irradiation the merry-go-round rotates at a constant speed of 30 rpm so that all cuvettes containing sample and actinometric solutions receive equal amounts of radiation, a necessary requirement for measuring photodegradation in the aqueous phase. The major difference between this and the ECETOC apparatus is that the optical bench allows irradiation of each sample only for a fraction of the time of the experiment whereas the ECETOC system allows for continuous irradiation. Much longer experimental times (approximately 10 x) are therefore required with the optical bench system.

3. Other Types of Apparatus Used in the Ring-Test

The Xenotest (laboratory M) and the merry-go-round (laboratory L) apparatuses are similar to the ECETOC apparatus and follow the criteria laid down in the protocol. One participant (laboratory J) in the round-robin exercise used a xenon-source with a parabolic mirror which focusses a parallel light beam through a borosilicate filter onto the face of a quartz cuvette. This type of apparatus allows the irradiation of only one cuvette at a time and is not recommended in its present form notwithstanding the fact that acceptable results were obtained in the ring test.

The use of tubes instead of rectangular cuvettes in the photosynthesis apparatus used by laboratory K also produces a rather poorly-defined irradiation of the sample, since the path-length is not constant and reflection may occur. This set-up is therefore not adequate for the purpose of the study. This apparatus can, however, be adapted so as to make it conform to the principles laid down by ECETOC (1981).

B. WITH MONOCHROMATIC LIGHT

The apparatus comprises a suitable arc lamp, and quartz collecting optics which focus the arc light onto the entrance slit of a monochromator or project it onto an interference filter. The emergent monochromatic light of a selected wavelength is collected by a quartz lens, if required, and is projected as a suitably-collimated beam onto a 1 cm pathlength, thermostatted, quartz cuvette containing the test solution.

Generally, longer experimental times will be required than when polychromatic light is used. For chemicals with a very small direct photolysis quantum yield an arc lamp with sufficient light intensity is necessary. In some of the apparatuses a beam splitter can be mounted in the monochromatic light path before the cuvette in order to reflect a small part of the incident light onto a calibrated UV-sensitive photodiode. This permits the light intensity to be kept constant, and sometimes allows regulation of the light intensity by controlling the feeding voltage of the lamp. For more details on the design requirements of monochromatic irradiation systems suitable for photochemical investigation the reader is referred to Johns et al. (1965), Parker (1968) and West (1973).

Safety Precautions

It is emphasised that the UV light generated in all apparatuses can be harmful to the eyes and skin. It is therefore essential to screen the light source or to wear both eye and skin protection.

APPENDIX 3

ACTINOMETRY BASED ON PHOTOOXIDATION OF OXALIC ACID

The actinometry is based on the following well-established photo-sensitised decomposition :

$$(COOH)_2 \xrightarrow{h\nu\ (UO_2^{++})} CO_2 + CO + H_2O$$

The actinometric solution is composed of 0.01 mole.litre^{-1} uranyl sulfate and 0.05 mole.litre^{-1} oxalic acid (Calvert and Pitts, 1966; Taylor, 1971; Murov, 1973). Oxalic acid is determined by titration with an acidic solution of $KMnO_4$ (0.02 mole.litre^{-1}; 0.1N) before and after irradiation, which is usually for 5 to 10 minutes.

Example :

a) titration of $KMnO_4$ by standard 0.05 mole.litre^{-1} (0.1N) oxalic acid.
2 cm^3 of oxalic acid solution $\longrightarrow$ a cm^3 of $KMnO_4$ solution.

b) titration of the actinometric solution before irradiation.
2 cm^3 of actinometric solution $\longrightarrow$ b cm^3 of $KMnO_4$ solution.

c) titration of the actinometric solution after irradiation.
2 cm^3 of actinometric solution $\longrightarrow$ c cm^3 of $KMnO_4$ solution.

The number of moles of oxalic acid which disappear during the irradiation of 2 cm^3 of actinometric solution is :

$$\Delta X = 0.05 \times 2.10^{-3} \times \frac{b-c}{a}$$

In one example, for a 5 minute irradiation

$$a = 2.50\ cm^3,\ b = 2.52\ cm^3,\ c = 1.82\ cm^3$$

$$\text{Thus, } \Delta X = 2.8\times10^{-5} \text{ mole.per } 2cm^3$$

The quantum yield ϕ_A of the UO_2-photosensitised decomposition of oxalic acid is 0.56 at between 290 and 490 nm .

$$\phi_A = \frac{N.\Delta X}{t.\int_{300}^{490} I_a(\lambda).d\lambda}$$

t = the irradiation time (in seconds)
N = 6.022×10^{23} (Avogadro's number)

$\int_{290}^{490} I_a(\lambda).d\lambda$ = the light energy absorbed by 2 cm^3 of actinometric solution.

It is stressed that the actinometric measurement supplies the absolute value, expressed in photons.$cm^{-3}.s^{-1}$, of the total absorbed light in the whole range 290-490 nm.

In our example :

$$\int_{290}^{490} I_a(\lambda).d\lambda = \frac{6.022 \times 10^{23} \times 2.8 \times 10^{-5}}{0.56 \times 5 \times 60}$$

= 1.0×10^{17} photons.s^{-1}.2 cm^{-3} (for 2 cm^3 of solution; optical path 1 cm; exposed area 2 cm^2).

or $\int_{290}^{490} I_a(\lambda).d\lambda$ = 5.0×10^{16} photons.$cm^{-3}.s^{-1}$ (for 1 cm^3 of solution; optical path 1 cm; exposed area 1 cm^2).

APPENDIX 4

TABLE 1

Characteristics of Apparatus Used

Laboratory+	Type of Apparatus++	Type of Lamp for Polychromatic Light	Filter Set Up *	Determination of Light Intensity of Lamp
A	ECETOC	OSRAM-HVI 400 W	L	Calculation from manufacturer's data
B	ECETOC	OSRAM-HVI 400 W	L	Calculation from manufacturer's data
C	ECETOC	OSRAM-HVI 400 W	C	Calculation from manufacturer's data
D	ECETOC	OSRAM-HVI 400 W	L	Calculation from manufacturer's data
E	ECETOC	OSRAM-HVI 400 W	L	Calculation from manufacturer's data
F	ECETOC	Philips - HPM12 Mercury 460 W	L	Calculation from manufacturer's data
G	Optical Bench	Thorn Type Mercury 250 W	C	With spectroradiometric apparatus
H	Optical Bench	Thorn Type Mercury 250 W	L	Calculation from manufacturer's data
I	Optical Bench	Xenon 2.5 KW	Monospec 600 Monochromator	Calibrated photodiode actinometer
J	Suntest Original Hanau	Xenon 2.5 KW	L	Calculation from manufacturer's data
K	Merry-go-Round Hans Mangels Labortechnik	TQ150-Mercury high pressure immersion-Hanau	L	Calculation from manufacturer's data
L	Merry-go-Round own construction	Philips HPK - 125 W	L	Calculation from manufacturer's data
M	Xenotest - 450 Original Hanau	Xenon 450 W	L	Calculation from manufacturer's data

* L = solarised borosilicate filter; C = non-ageing long pass filter.
\+ = The 13 participants are listed on p.61 in section I.
++ = See Appendix 2.

TABLE 2

Experimental Conditions for the Determination of the Quantum Yield of PENTACHLOROPHENOL

pKa : 4.8 λ max : 320 nm

Laboratory	Total Duration of Test (min)	Initial Concentration mole.litre^{-1}	Temp. C°	pH, Type of Buffer	Analytical Method	Quantum Yield Polychromatic Light	Quantum Yield Monochromatic Light
A	15	2.0×10^{-4}	30-34	10 borate	Photometric after cyclohexane extraction	0.009 0.010	(pH=6): 0.014 0.016;0.013 0.012 (pH=13):0.012 0.015;0.012 0.013 λ = 313 nm
B	30	9.8×10^{-5}	30	9 borate	HPLC	0.011	
C	25	2.0×10^{-4}	25	9 borate	HPLC	0.013	
D	20	2.0×10^{-4}	25	10 NaOH	HPLC Photometric Photometric Photometric	0.011 0.017 0.010 0.009	
E	50	8.0×10^{-5}	25	9 borate	HPLC	0.0082	
F	30	2.0×10^{-4}	30-40	10 borate	HPLC	0.010	
G	195	3.9×10^{-5}	21	9 borate	HPLC	0.017	(pH=7): 0.017 λ = 313 nm
H	180	4.1×10^{-5}	22	9 borate	HPLC	0.030	
I	220	1.1×10^{-4}	20	9 borate	HPLC	-	0.017 λ = 318 nm
J	90	2.0×10^{-4}	27	10 borate	Photometric	0.009	
K	20	3.8×10^{-5}	30	9 borate	HPLC	0.012	
L	13	2.4×10^{-4}	30-32	10 borate	HPLC	0.016	
M	45	8.6×10^{-5}	32	9 borate	GC	0.011	

TABLE 3

Experimental Conditions for the Determination of the Quantum Yield of 2,4-DICHLOROPHENOL

pKa : 7.5 λ max. 240; 305 nm

Laboratory	Total Duration of Test (min)	Initial Concentration mole.litre^{-1}	Temp. °C	pH, Type of Buffer	Analytical Method	Quantum Yield Polychromatic Light	Quantum Yield Monochromatic Light
A	65	2.4×10^{-4}	30-34	6 citrate	HPLC	0.025;0.030	(pH=5.5): 0.010; 0.015; 0.030; 0.020; 0.020; 0.020;0.030.
	28	2.5×10^{-4}	30-34	9 borate	HPLC	0.11	(pH=8.5): 0.12; 0.13; 0.16; 0.13 0.14; (pH=13): 0.10; 0.08; 0.08; λ = 296 nm
B			not measured				
C	60	2.0×10^{-4}	25	9 borate	HPLC	0.11	
D	20	2.0×10^{-4}	25-30	9 borate	HPLC	0.18	
		1.0×10^{-4}	25-30		photometric	0.10	
	10	1.0×10^{-4}	25-30		photometric	0.075	
E	4	6.2×10^{-5}	24	9 borate	HPLC	0.13	
F	30	2.0×10^{-4}	30-40	10 borate	HPLC	0.11	
G	25	5.6×10^{-5}	22	9 borate	HPLC	0.19	
H	110	6.0×10^{-5}	27	9 borate	HPLC	0.25	
I	125	1.4×10^{-4}	20	9 borate	HPLC		0.085 0.075 0.070 λ = 298 nm
J	210	5.0×10^{-4}	27	7 phosphate	photo-	0.13	
	90			10 borate	metric	0.10	
K	3	6.3×10^{-5}	30	9 borate	HPLC	0.14	
L	30	9.5×10^{-5}	30-32	5 acetate	HPLC	0.0039;0.0042	
	1	1.0×10^{-4}	30-32	9 borate	HPLC	0.062;0.063	
M	90	1.5×10^{-4}	32	7 phosphate	GC	0.092	
				9 borate		0.10	

TABLE 4

Experimental Conditions for the Determination of the Quantum Yield of 3,4-DICHLOROANILINE*

pKa : 2.9 λ max : 207; 242; 297 nm

Laboratory	Total Duration of Test (min)	Initial Concentration mole.litre^{-1}	Temp. °C	pH, Type of Buffer	Analytical Method	Quantum Yield Polychromatic Light	Quantum Yield Monochromatic Light
A	150	2.5×10^{-4} 2.9×10^{-4} 3.8×10^{-4} (cosolvent 0.1% CH_3CN throughout)	30-34	7 phosphate	HPLC	0.017 0.019 (0.020)	0.052 λ = 313 nm
B	25	1.1×10^{-4}	30	9 borate	HPLC	0.016	
C	25	2.0×10^{-4}	25	9 borate	HPLC	0.058	
D	120 120 20	5.0×10^{-5}	25-30	9 borate	GC GC photometric	0.084 0.093 0.057	
E	90	1.0×10^{-4}	25	9 borate	HPLC	0.043	
F	180	2.0×10^{-4}	30-40	10 borate	HPLC	0.040	
G	80	6.9×10^{-5}	22	9 borate	HPLC	0.11	
H	180	9.9×10^{-5}	27	9 borate	HPLC	(0.073) (0.085)	
I	308	1.1×10^{-4}	20	9 borate	HPLC	-	0.010 0.008 0.012 λ = 295 nm
J	150 150	2.0×10^{-4}	27	7 phosphate 10 borate	HPLC	0.040 0.040 (0.090)	
K	30 35	6.9×10^{-5} 7.3×10^{-5}	30 30	9 borate	HPLC	0.029 (0.041)	
L	10	9.6×10^{-5} 9.5×10^{-5} 1.0×10^{-4} 1.0×10^{-4}	30-32	7 phosphate	HPLC	0.014;0.017; (0.020) (0.026) (0.020)	
M	135	1.4×10^{-4}	32	9 borate	GC	0.010	

* Values in brackets refer to measurements with the same product (Koch-Light).

TABLE 5

Experimental Conditions for the Determination of the Quantum Yield of 4-NITROPHENOL - pH<4

pKa : 7.2 λ max : 205; 260; 262 nm

Laboratory	Total Duration of Test (min)	Initial Concentration mole.litre^{-1}	Temp. °C	pH, Type of Buffer	Analytical Method	Quantum Yield Polychromatic Light	Quantum Yield Monochromatic Light
A	230	4.1×10^{-5}	30-34	2.5 citrate/HCl	photometric	5.4×10^{-5} 13×10^{-5}	(1.4<pH<5.6) 19×10^{-5}; 8.5×10^{-5} 8.0×10^{-5}; $8.5 \times 10^{-}$ 9.0×10^{-5} λ = 313 nm
B	150	5.7×10^{-5}	30	2 citrate/HCl	HPLC	11×10^{-5}	
C	360	1.0×10^{-4}	25-30	2 citrate/HCl	HPLC	10×10^{-5}	
D	120 60	5.0×10^{-5} 5.0×10^{-5}	25	2 citrate/HCl	photometric	17×10^{-5} 19×10^{-5}	
E	300	4.8×10^{-5}	25	2 HCl/KCl	HPLC	3.3×10^{-5}	
F	480	2.0×10^{-4}	30-40	2 HCl/KCl	HPLC	10×10^{-5}	
G	4410	5.0×10^{-5}	22	2 HCl/KCl	HPLC	11×10^{-5}	
H	2750	9.5×10^{-5}	27	2 HCl/KCl	HPLC	7.6×10^{-5}	
I	monochromatic light intensity insufficient						
J	900	1.0×10^{-4}	27	3 citrate/HCl	HPLC	5.0×10^{-5}	
K	22 45	4.2×10^{-5} 8.5×10^{-5}	30 30	2 citrate/HCl	HPLC	21×10^{-5} 11×10^{-5}	
L	60	8.0×10^{-4}	33	2 HCl/KCl	HPLC	13×10^{-5}	
M	1000	1.8×10^{-4}	32	4 phthalate/ phthalic acid	GC	6.7×10^{-5}	

TABLE 6

Experimental Conditions for the Determination of the Quantum Yield of 4-NITROPHENOL - pH 9

pKa : 7.2 λ max : 400 nm

Laboratory	Total Duration of Test (min)	Initital Concentration mole.litre^{-1}	Temp. °C	pH, Type of Buffer	Analytical Method	Quantum Yield Polychromatic Light	Monochromat: Light
							(pH=11.5)
A	230	$3.8x10^{-5}$	30-34	9 borate	photometric	$3.0x10^{-6}$ $3.6x10^{-6}$	$7.0x10^{-6}$ $12x10^{-6}$ λ = 365 n:
B	150	$5.6x10^{-5}$	30	9 borate	HPLC	$12x10^{-6}$	
C	360	$1.0x10^{-4}$	25-30	9 borate	HPLC	$1.9x10^{-6}$	
D	120 120 60	$5.0x10^{-6}$ $1.0x10^{-5}$ $1.0x10^{-5}$	25-30	9 borate	HPLC photometric photometric	$10x10^{-6}$ $8.0x10^{-6}$ $7.0x10^{-6}$	
E	300	$4.8x10^{-5}$	25	9 borate	HPLC	$3.8x10^{-6}$	
F	480	$2.0x10^{-4}$	30-40	10 borate	HPLC	$10x10^{-6}$	
G	3930	$4.9x10^{-5}$	22	9 borate	HPLC	$7.1x10^{-6}$	
H	4250	$9.3x10^{-5}$	27	9 borate	HPLC	$5.6x10^{-6}$	
I	monochromatic light intensity insufficient						
J	900	$1.0x10^{-6}$	27	9 borate	HPLC	$3.0x10^{-6}$	
K	480	$1.7x10^{-5}$	30	9 borate	HPLC	$12x10^{-6}$	
L	200	$4.2x10^{-4}$	30-32	9 borate/ phosphate	HPLC	$18x10^{-6}$	
M	960	$1.5x10^{-4}$	32	9 borate	GC	$12x10^{-6}$ $13x10^{-6}$	

TABLE 7/1

Single-Laboratory Comparison of ϕ Values - Polychromatic Light

Compound	Lab. A. ECETOC Apparatus				Lab.D. ECETOC Apparatus				Lab. L. Apparatus similar to ECETOC Apparatus			
	n(1)	$\bar{x}$(2)	Range	Coeff. Variation(3) %	n	$\bar{x}$	Range	Coeff. Variation %	n	$\bar{x}$	Range	Coeff. Variation %
tachlorophenol pH=9-10	2	0.95×10^{-2}	$0.90-1.0 \times 10^{-2}$	7	4	1.2×10^{-2}	$0.9-1.7 \times 10^{-2}$	31				
-Dichlorophenol pH=5-6	2	2.8×10^{-2}	$2.5-3.0 \times 10^{-2}$	13					2	0.41×10^{-2}	$0.39-0.42 \times 10^{-2}$	5
pH=9					3	12×10^{-2}	$7.5-18 \times 10^{-2}$	45	2	6.3×10^{-2}	$6.2-6.3 \times 10^{-2}$	1
-Dichloroaniline	3	1.9×10^{-2}	$1.7-2.0 \times 10^{-2}$	8	3	7.8×10^{-2}	$5.7-9.3 \times 10^{-2}$	24	5	1.9×10^{-2}	$1.4-2.6 \times 10^{-2}$	23
itrophenol pH=2	2	0.92×10^{-4}	$0.54-1.3 \times 10^{-4}$	58	2	1.8×10^{-4}	$1.7-1.9 \times 10^{-4}$	8				
itrophenol pH=9	2	3.3×10^{-6}	$3.0-3.6 \times 10^{-6}$	13	3	8.3×10^{-6}	$7.0-10 \times 10^{-6}$	18				
ge %				7 - 58				8-45				1-23

= number of individual determinations

= mean

$$= \text{coefficient of variation in } \% = \frac{\left[\frac{\Sigma (x-\bar{x})^2}{n-1}\right]^{1/2}}{\bar{x}} \cdot 100$$

TABLE 7/2

Single-Laboratory Comparison of ϕ Values - Monochromatic Light

Compound	Laboratory A				Laboratory I			
	n(1)	$\bar{x}$(2)	Range	Coeff. Variation(3) %	n	$\bar{x}$	Range	Coeff. Variation %
ıtachlorophenol								
pH=6	3	1.4×10^{-2}	$1.3-1.6 \times 10^{-2}$	11				
pH=13	4	1.3×10^{-2}	$1.2-1.5 \times 10^{-2}$	11				
ɜ-Dichlorophenol								
pH=5.5	7	2.1×10^{-2}	$1.0-3.0 \times 10^{-2}$	35				
pH=8.5-9	5	1.4×10^{-1}	$1.2-1.6 \times 10^{-1}$	11	3	7.7×10^{-2}	$7.0-8.5 \times 10^{-2}$	10
pH=13	3	8.7×10^{-2}	$8.0-10 \times 10^{-2}$	13				
4-Dichloroaniline								
pH=9					3	1.0×10^{-2}	$0.80-1.2 \times 10^{-2}$	20
Nitrophenol								
pH=1.4-5.6	5	11×10^{-5}	$8.0-19 \times 10^{-5}$	44				
pH=11.5	2	9.5×10^{-6}	$7.0-12 \times 10^{-6}$	37				
Range %				11-44				10-20

) = number of individual determinations

) = mean

) = coefficient of variation in % = $\frac{\left[\frac{\Sigma(x-\bar{x})^2}{n-1}\right]^{1/2}}{\bar{x}} \cdot 100$

TABLE 8/1

Inter-Laboratory Comparison of ϕ Values Obtained With

Different Types of Apparatus - Polychromatic Light

	All types of Apparatus (13 laboratories)				ECETOC apparatus (Lab. A to F)				Apparatus similar to ECETOC apparatus (Lab. L, M)			
Compound	n(1)	$\bar{x}$(2)	Range	Coeff.Var.(3) %	n	$\bar{x}$	Range	Coeff.Var. %	n	$\bar{x}$	range	Coeff.Var. %
tachlorophenol pH=9-10	16	1.3×10^{-2}	$0.8-3.0 \times 10^{-2}$	43	10	1.1×10^{-2}	$0.8-1.7 \times 10^{-2}$	24	2	1.4×10^{-2}	$1.1-1.6 \times 10^{-2}$	26
-Dichlorophenol pH=9-10	14	0.12	0.062-0.25	43	7	0.12	0.075-0.18	28	3	0.075	0.062-0.10	29
-Dichloroaniline pH=7-10	24	4.4×10^{-2}	$1.0-11 \times 10^{-2}$	68	10	4.5×10^{-2}	$1.6-9.3 \times 10^{-2}$	63	6	1.8×10^{-2}	$1.0-2.6 \times 10^{-2}$	31
itrophenol pH=2-4	15	11×10^{-5}	$3.3-21 \times 10^{-5}$	47	8	11×10^{-5}	$3.3-19 \times 10^{-5}$	48	2	9.9×10^{-5}	$6.7-13 \times 10^{-5}$	45
itrophenol pH=9-10	16	8.1×10^{-6}	$1.9-18 \times 10^{-6}$	62	9	6.6×10^{-6}	$1.9-12 \times 10^{-6}$	54	3	14×10^{-6}	$12-18 \times 10^{-6}$	22
ge %				43-68				24-63				22-45

= number of individual determinations, data obtained by different laboratories.

= mean

$$= \text{coefficient of variation in \%} = \frac{\left[\frac{\Sigma (x-\bar{x})^2}{n-1}\right]^{1/2}}{\bar{x}} \cdot 100$$

TABLE 8/2

Inter-Laboratory Comparison of ϕ Values With

Different Types of Apparatus - Polychromatic Light

Compound	Optical Bench (Lab. G, H)				Apparatuses (4) (Lab.J, K)			
	n(1)	$\bar{X}$(2)	Range	Coeff.Var.(3) %	n	$\bar{X}$	Range	Coeff.Var. %
Pentachlorophenol pH=9-10	2	2.4×10^{-2}	$1.7-3.0 \times 10^{-2}$	39	2	1.1×10^{-2}	$0.9-1.2 \times 10^{-2}$	25
2,4-Dichlorophenol pH=9-10	2	0.22	0.19-0.25	19	2	0.12	0.10-0.14	24
3,4-Dichloroaniline pH=7-10	3	8.9×10^{-2}	$7.3-11 \times 10^{-2}$	21	5	4.8×10^{-2}	$2.9-9.0 \times 10^{-2}$	50
4-Nitrophenol pH=2-4	2	9.3×10^{-5}	$7.6-11 \times 10^{-5}$	26	3	12×10^{-5}	$5.0-21 \times 10^{-5}$	66
4-Nitrophenol pH=9-10	2	6.4×10^{-6}	$5.6-7.1 \times 10^{-6}$	17	2	7.5×10^{-6}	$3.0-12 \times 10^{-6}$	85
Range %				17-39				24-85

(1) = number of individual determinations

(2) = mean

(3) = coefficient of variation in % = $\frac{\left[\frac{\Sigma (x-\bar{x})^2}{n-1}\right]^{1/2}}{\bar{x}} \cdot 100$

(4) = although these apparatuses differ, results from them were considered together as neither of them conformed completely to the principles laid down in the protocol.

TABLE 8/3

Inter-Laboratory Comparison of ϕ Values-

Monochromatic Light

Compound	n(1)	X(2)	Range	Coeff. Variation(3)
Pentachlorophenol pH=6-13	9	1.4×10^{-2}	$1.2\text{-}1.7 \times 10^{-2}$	14
2,4-Dichlorophenol pH=9-13	11	0.11	0.070-0.16	27
3,4-Dichloroaniline pH=7-9	4	2.1×10^{-2}	$0.8\text{-}5.2 \times 10^{-2}$	103
Range %				14-103

(1) = number of individual determinations

(2) = mean

(3) = coefficient of variation in % = $\frac{\left[\frac{\Sigma (x-\bar{x})^2}{n-1}\right]^{1/2}}{\bar{x}} \cdot 100$

TABLE 9

Characteristics of Apparatus for Measuring Aqueous Photolysis Quantum Yield

Apparatus	Advantages		Disadvantages	
With Polychromatic Light				
ECETOC apparatus	results similar to those obtained with monochromatic light	- short duration of experiments - relatively cheap apparatus	- more cumbersome calculations	
Optical bench			- possibility of errors due to further solarisation when using borosilicate filter around lamp (eliminated by using non-ageing filter before the cuvettes).	- experiments last longer due to intermittent irradiation
Xenotest - Laboratory L apparatus		- short duration of experiments		
Suntest and Hans Mangels apparatus		- short duration of experiments - relatively cheap apparatus		- does not conform to principles for photolysis measurements (adaptation possible)
With Monochromatic Light				
Optical bench	- easy determination of ϕ for compounds with several absorption bands in the solar spectral range - easy calculations			- more expensive apparatus - experiments are of long duration - high light intensity necessary for determination of small ϕ .

TABLE 10
Determination of the Relative Incident Light Intensity

	(1)	(2)	(3)	(4)=(2)x(3)
Spectral Range in nm (λ_{max})	$I_{ro}(\lambda)$, $mW.m^{-2}.s^{-1}.10\ nm^{-1}$	$I_{ro}(\lambda).10^9$ $einstein.m^{-2}.s^{-1}.10nm^{-1}$	$\frac{I_{rt}(\lambda)}{I_{ro}(\lambda)}$	$I_{rt}(\lambda).10^9$ $einstein.m^{-2}.s^{-1}.10nm^{-1}$
300/310(302)	240	606	0.140	85
310/320(313)	325	850	0.358	304
320/330(326)	265	722	0.521	376
330/340(334)	235	656	0.554	363
340/350(345)	365	1050	0.741	778
350/360(358)	685	2050	0.818	1680
360/370(365)	770	2350	0.845	1990
370/380(375)	1140	3570	0.870	3110
380/390(382)	940	3000	0.881	2640
390/400(398)	610	2030	0.900	1830
400/410(405)	1190	4030	0.912	3680
410/420(418)	1215	4240	0.915	3880
420/430(427)	670	2390	0.920	2200
430/440(436)	800	2910	0.920	2680
440/450(442)	350	1290	0.920	1190
450/460				450
460/470				450
470/480				460
480/490				460

(1) Data from manufacturer. For the conversion into einsteins the wavelengths corresponding with maximum intensity were used instead of the mean values.
(2) see equation III
(3) see equation VIII;$(OD)_F$ see fig.4
(4) see equation IX

TABLE 11

Calculation of the Absolute Incident Light Intensity

Spectral Range nm	(4) $I_{rt}(\lambda).10^{13}$, einstein. $cm^{-2}.s^{-1}$. $10nm^{-1}$	(5) $\left[\frac{I_{ra}(\lambda).\ell}{I_{rt}(\lambda)}\right]_A$	(6)=(4)x(5) $I_{ra}(\lambda).10^{13}$, einstein.cm^{-3}. $s^{-1}.10nm^{-1}$	(7) P	(8)=(7)x (8) $I_a(\lambda).10^{-16}$, photons.cm^{-3}. $s^{-1}.10nm^{-1}$	(9)=$\frac{(8).\ell}{(5)}$ $I_t(\lambda).10^{-16}$ photons. $cm^{-2}.s^{-1}$. $10nm^{-1}$
300/310	85	1.000	85	0.0095	0.047	0.047
310/320	304	1.000	304	0.034	0.17	0.17
320/330	376	0.990	372	0.041	0.21	0.21
330/340	363	0.940	341	0.038	0.19	0.20
340/350	778	0.746	580	0.065	0.32	0.43
350/360	1680	0.515	865	0.096	0.48	0.93
360/370	1990	0.355	706	0.079	0.39	1.1
370/380	3110	0.250	778	0.086	0.43	1.7
380/390	2640	0.194	512	0.057	0.29	1.5
390/400	1830	0.229	419	0.047	0.23	1.0
400/410	3680	0.285	1050	0.12	0.58	2.0
410/420	3880	0.318	1230	0.14	0.68	2.1
420/430	2200	0.302	664	0.074	0.37	1.2
430/440	2680	0.253	678	0.075	0.38	1.5
440/450	1190	0.191	227	0.025	0.13	0.65
450/460	450	0.168	76	0.0084	0.042	0.25
460/470	450	0.127	57	0.0064	0.031	0.24
470/480	460	0.085	39	0.0043	0.022	0.26
480/490	460	0.023	11	0.0012	0.0055	0.24
			$\Sigma(6)=8990.10^{-13}$ einstein.$cm^{-3}.s^{-1}$	$\Sigma(7)=1$	$\Sigma(8)=5.0x10^{16}$ photons.$cm^{-3}.s^{-1}$	

(5) see equation XI
(6) see equation XII
Σ (6) see equation XIII
(7) see equation XIV
(8) see equation XV
Σ (8) see equation VII, obtained by actinometry (cf. Appendix 3
(9) see equation XVI

TABLE 12

Calculation of the Mean Values of Absorption by the Test Compound

	(10)	(11)	(12)	(13)	(14)
(nm)	$(OD)_c^0$	$(OD)_c^5$	$\left[\frac{I_a(\lambda)\cdot\ell}{I_t(\lambda)}\right]_0$	$\left[\frac{I_a(\lambda)\cdot\ell}{I_t(\lambda)}\right]_5$	$\left[\frac{I_a(\lambda)\cdot\ell}{I_t(\lambda)}\right]_{0-5}$
300	0.535	0.560	0.71	0.60	0.65
305	0.660	0.620	0.78	0.70	0.74
310	0.785	0.715	0.84	0.77	0.80
315	0.930	0.825	0.88	0.83	0.86
320	0.980	0.855	0.90	0.86	0.88
325	0.790	0.710	0.84	0.78	0.81
330	0.500	0.480	0.68	0.61	0.64
335	0.280	0.310	0.48	0.40	0.44
340	0.150	0.195	0.29	0.24	0.27
345	0.080	0.125	0.17	0.14	0.15
350	0.045	0.082	0.098	0.082	0.090
355	0.025	0.060	0.056	0.047	0.051
360	0.020	0.045	0.045	0.038	0.042

(10) - (11) absorbance values of the solution of the chemical after 0 and 5 minutes irradiation.
(12) see equation XVII
(13) see equation XVIII
(14) see equation XIX

TABLE 13

Calculation of Total Absorbed Light Intensity

(15)	(16)	(9)	(17) $= \frac{(9)x(16)}{\ell}$
Spectral Range, nm	$\left[\frac{I_a(\lambda).\ell}{I_t(\lambda)}\right]_{0\to5}^{\lambda\to(\lambda+10)}$	$I_t(\lambda).10^{-16}$ photons.cm^{-2}. s^{-1}.10nm^{-1}	$\overline{I_a(\lambda)}.10^{-16}$ photons. cm^{-3}. s^{-1}.10nm^{-1}
300/310	0.74	0.047	0.035
310/320	0.85	0.17	0.14
320/330	0.79	0.21	0.16
330/340	0.45	0.20	0.090
340/350	0.17	0.43	0.071
350/360	0.059	0.93	0.054

$$\int_{300}^{360} \overline{I_a(\lambda)}.d\lambda = 0.55x10^{16} \text{photons.cm}^{-3}.\text{s}^{-1}$$

(16) see equation XX

(9) see table 11

(17) see equation XXI

TABLE 14

Yearly Averaged, Mid-day Sunlight Intensities at Sea Level, Corrected for Reflection from the Water Surface, for Latitude 40 to 50 Degrees North (Zepp and Cline, 1977)

Wavelength range, nm	Sunlight intensities $I_o(\lambda)$ photons.cm^{-2}.s^{-1}.10 nm^{-1}	Einstein.cm^{-2}.s^{-1}.10 nm^{-1}
290 - 300	3.6×10^{11}	6.0×10^{-13}
300 - 310	3.1×10^{13}	5.2×10^{-11}
310 - 320	1.9×10^{14}	3.2×10^{-10}
320 - 330	4.0×10^{14}	6.6×10^{-10}
330 - 340	5.2×10^{14}	8.6×10^{-10}
340 - 350	6.0×10^{14}	1.0×10^{-9}
350 - 360	6.2×10^{14}	1.0×10^{-9}
360 - 370	6.8×10^{14}	1.1×10^{-9}
370 - 380	7.4×10^{14}	1.2×10^{-9}
380 - 390	8.8×10^{14}	1.5×10^{-9}
390 - 400	1.2×10^{15}	2.0×10^{-9}
400 - 410	1.7×10^{15}	2.8×10^{-9}
410 - 420	2.0×10^{15}	3.3×10^{-9}
420 - 430	1.9×10^{15}	3.2×10^{-9}
430 - 440	2.0×10^{15}	3.3×10^{-9}
440 - 450	2.4×10^{15}	4.0×10^{-9}
450 - 460	2.6×10^{15}	4.3×10^{-9}
460 - 470	2.6×10^{15}	4.3×10^{-9}
470 - 480	2.7×10^{15}	4.5×10^{-9}
480 - 490	2.6×10^{15}	4.3×10^{-9}
490 - 500	2.6×10^{15}	4.3×10^{-9}
500 - 510	2.7×10^{15}	4.5×10^{-9}
510 - 520	2.8×10^{15}	4.6×10^{-9}
520 - 530	2.8×10^{15}	4.6×10^{-9}
530 - 540	2.8×10^{15}	4.6×10^{-9}
540 - 550	2.8×10^{15}	4.6×10^{-9}
550 - 560	2.8×10^{15}	4.6×10^{-9}
560 - 570	2.9×10^{15}	4.8×10^{-9}
570 - 580	2.9×10^{15}	4.8×10^{-9}
580 - 590	2.9×10^{15}	4.8×10^{-9}
590 - 600	2.9×10^{15}	4.8×10^{-9}

TABLE 15

Calculation of the Rate of Light Absorption $\{2.3\times10^{3}.I_{o}(\lambda).\varepsilon(\lambda)\}$ of Mid-day Sunlight for each 10 nm Wavelength Band for the Chemicals Tested in the Ring Test, when Dissolved in the Top Millimeters of Natural Aquatic Systems, Situated in Latitude 40 to 50 Degrees North (ECETOC, 1981, p.51; Zepp and Cline, 1977).

Wavelength range,	Pentachlorophenol (pH 9-10)		2,4-Dichlorophenol, (pH 9-10)		3,4-Dichloroaniline, (pH 7-10)		4-Nitrophenol (pH 2-4)		4-Nitrophenol (pH 9-10)	
nm	ε $l.mole^{-1}.cm^{-1}$	rate, $s^{-1}.10nm^{-1}$	ε $l.mole^{-1}.cm^{-1}$	rate, $s^{-1}.10nm^{-1}$	ε $l.mole^{-1}.cm^{-1}$	rate, $s^{-1}.10nm^{-1}$	ε $l.mole^{-1}.cm^{-1}$	rate, $s^{-1}.10nm^{-1}$	ε $l.mole^{-1}.cm^{-1}$	rate, $s^{-1}.10nm^{-1}$
290 - 300	2.3×10^{3}	3.2×10^{-6}	2.6×10^{3}	3.6×10^{-6}	1.4×10^{3}	1.9×10^{-6}	7.4×10^{3}	1.0×10^{-5}	1.0×10^{3}	1.4×10^{-6}
300 - 310	3.4×10^{3}	4.1×10^{-4}	3.4×10^{3}	4.1×10^{-4}	1.2×10^{3}	1.4×10^{-4}	9.1×10^{3}	1.1×10^{-3}	1.1×10^{3}	1.3×10^{-4}
310 - 320	4.7×10^{3}	3.5×10^{-3}	2.3×10^{3}	1.7×10^{-3}	5.4×10^{2}	4.0×10^{-4}	9.8×10^{3}	7.2×10^{-3}	1.4×10^{3}	1.0×10^{-3}
320 - 330	4.1×10^{3}	6.2×10^{-3}	5.3×10^{2}	8.0×10^{-4}	1.5×10^{2}	2.3×10^{-4}	9.5×10^{3}	1.4×10^{-2}	2.0×10^{3}	3.0×10^{-3}
330 - 340	1.7×10^{3}	3.4×10^{-3}	1.1×10^{2}	2.2×10^{-4}	8.0×10^{1}	1.6×10^{-4}	8.2×10^{3}	1.6×10^{-2}	3.2×10^{3}	6.3×10^{-3}
340 - 350	4.7×10^{2}	1.1×10^{-3}	-	-	7.0×10^{1}	1.6×10^{-4}	6.2×10^{3}	1.4×10^{-2}	4.8×10^{3}	1.1×10^{-2}
350 - 360	1.3×10^{2}	3.0×10^{-4}	-	-	-	-	4.2×10^{3}	9.5×10^{-3}	7.1×10^{3}	1.6×10^{-2}
360 - 370	6.0×10^{1}	1.5×10^{-4}	-	-	-	-	2.5×10^{3}	6.3×10^{-3}	9.9×10^{3}	2.5×10^{-2}
370 - 380	-	-	-	-	-	-	1.3×10^{3}	3.6×10^{-3}	1.3×10^{4}	3.6×10^{-2}
380 - 390	-	-	-	-	-	-	5.8×10^{2}	2.0×10^{-3}	1.6×10^{4}	5.5×10^{-2}
390 - 400	-	-	-	-	-	-	2.2×10^{2}	1.0×10^{-3}	1.8×10^{4}	8.3×10^{-2}
400 - 410	-	-	-	-	-	-	4.0×10^{1}	2.6×10^{-4}	1.7×10^{4}	1.1×10^{-1}
410 - 420	-	-	-	-	-	-	-	-	1.6×10^{4}	1.2×10^{-1}
420 - 430	-	-	-	-	-	-	-	-	1.2×10^{4}	8.8×10^{-2}
430 - 440	-	-	-	-	-	-	-	-	8.0×10^{3}	6.1×10^{-2}
440 - 450	-	-	-	-	-	-	-	-	4.7×10^{3}	4.3×10^{-2}
450 - 460	-	-	-	-	-	-	-	-	2.3×10^{3}	2.3×10^{-2}
460 - 470	-	-	-	-	-	-	-	-	8.9×10^{2}	8.8×10^{-3}
470 - 480	-	-	-	-	-	-	-	-	2.7×10^{2}	2.8×10^{-3}
480 - 490	-	-	-	-	-	-	-	-	6.0×10^{1}	5.9×10^{-4}
490 - 500	-	-	-	-	-	-	-	-	1.0×10^{1}	9.9×10^{-5}

TABLE 16

Calculation of the Yearly-averaged, Photolytic Lifetime of the Chemicals Tested in the Ring Test, when Dissolved in the Top Millimeters of Natural Aquatic Systems, Situated in Latitude 40 to 50 Degrees North (ECETOC, 1981, p.51; Zepp and Cline, 1977).

The parameters used are :

$\Sigma_{\lambda_1}^{\lambda_2} 2.3 \times 10^3 . I_o(\lambda) . \Delta\lambda . \varepsilon(\lambda)$ (cf. Table 15 of this report)

and $\phi(\lambda)$ (cf. Table 8/1 of this report).

Compound	$\Sigma_{\lambda_1}^{\lambda_2} 2.3x10^3 . I_o(\lambda) . \Delta\lambda . \varepsilon(\lambda)$, s^{-1}	ϕ	Lifetime hours (days)
Pentachlorophenol	$1.5x10^{-1}$	$1.3x10^{-2}$	0.14 (0.006)
2,4-Dichlorophenol	$3.1x10^{-2}$	$1.2x10^{-1}$	0.075 (0.003)
3,4-Dichloroaniline	$1.1x10^{-2}$	$4.4x10^{-2}$	0.57 (0.024)
4-Nitrophenol (pH 2-4)	$7.5x10^{-1}$	$1.1x10^{-4}$	3.1 (0.13)
4-Nitrophenol (pH 9-10)	$6.9x10^{-0}$	$8.1x10^{-6}$	5.0 (0.21)

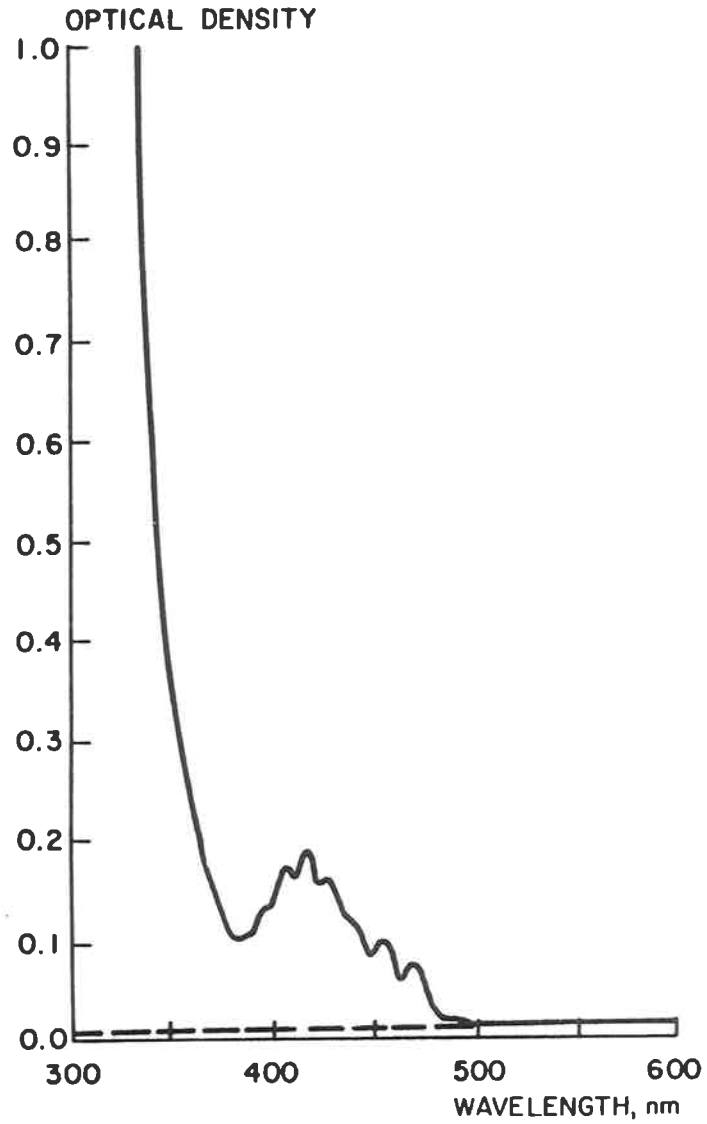

FIG. 1: ABSORPTION SPECTRUM OF THE URANYL SULPHATE/OXALIC ACID ACTINOMETER

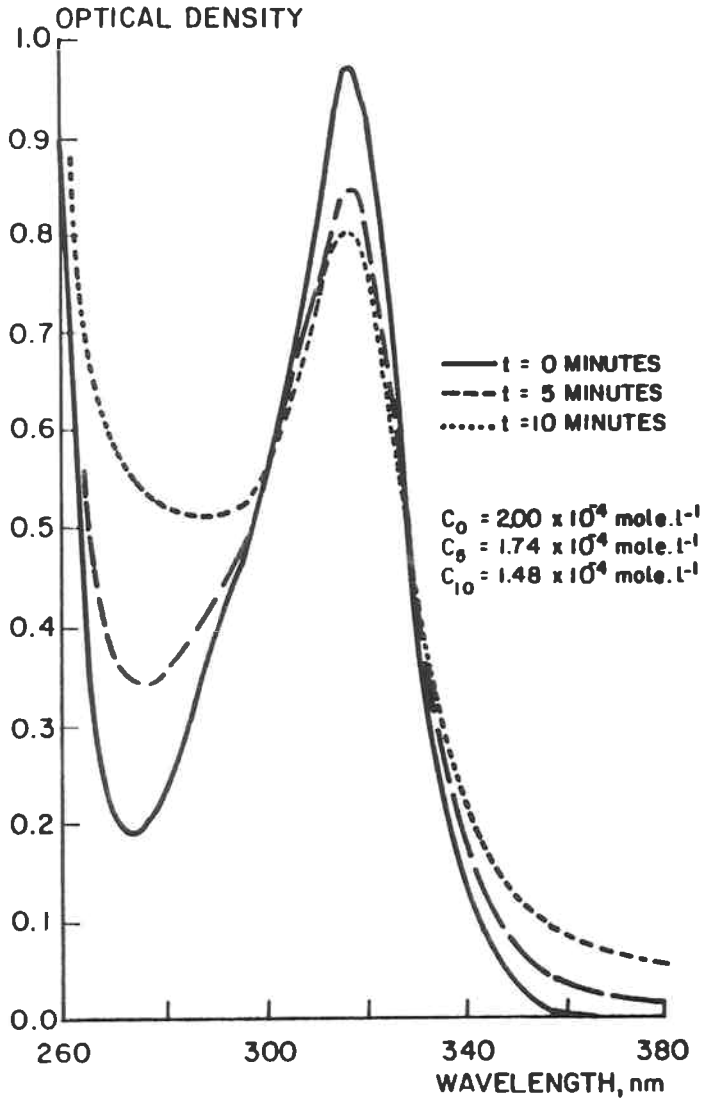

FIG. 2: ABSORPTION SPECTRUM OF PENTACHLOROPHENOL AFTER 0, 5 AND 10 MINUTES IRRADIATION

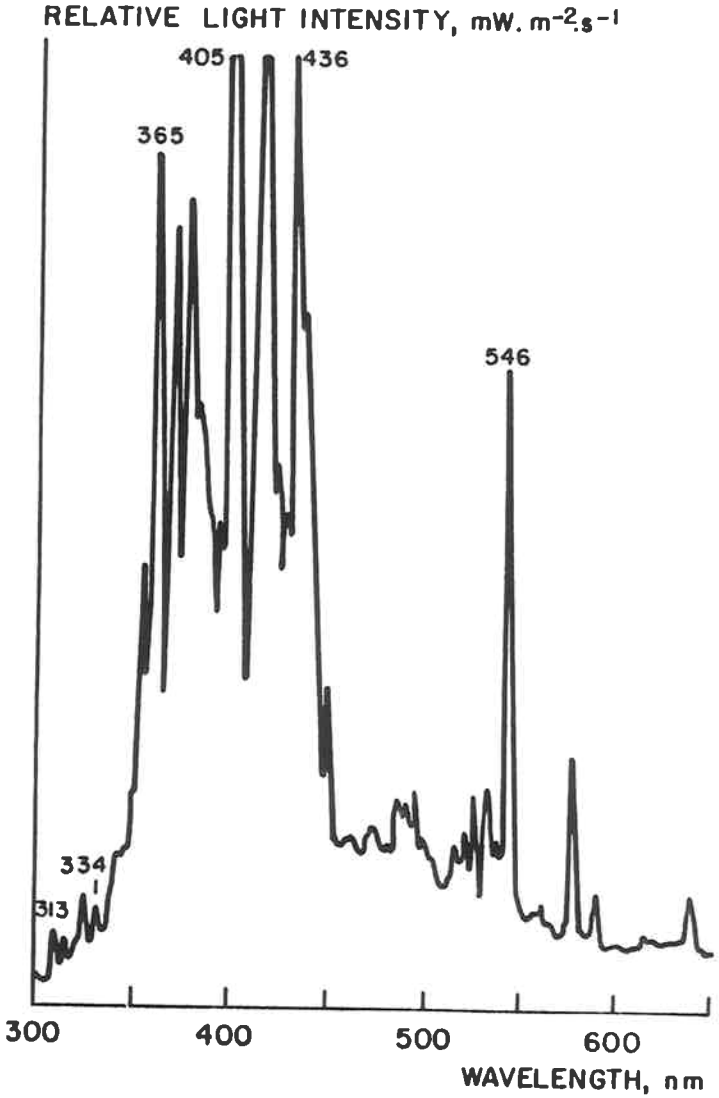

FIG. 3: CHARACTERISTICS OF THE LIGHT SOURCE (OSRAM-HVI-400W)

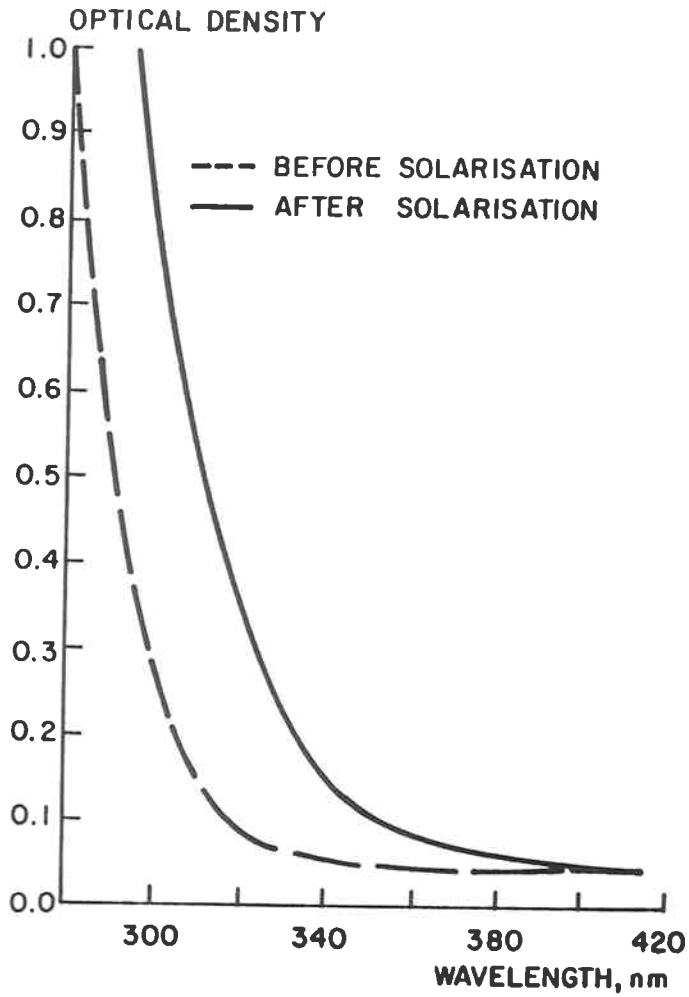

FIG. 4: ABSORPTION SPECTRUM OF BOROSILICATE FILTER BEFORE AND AFTER SOLARISATION

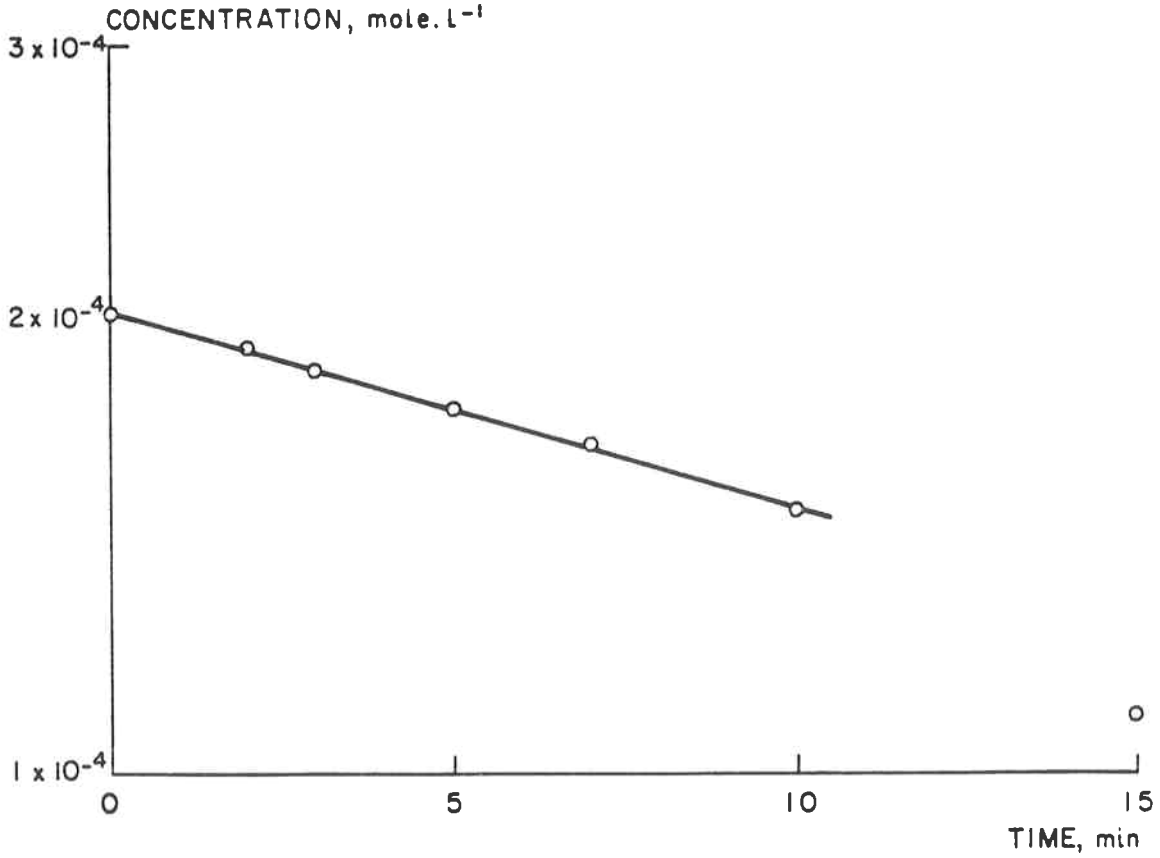

FIG. 5: DISAPPEARANCE KINETICS OF PENTACHLOROPHENOL

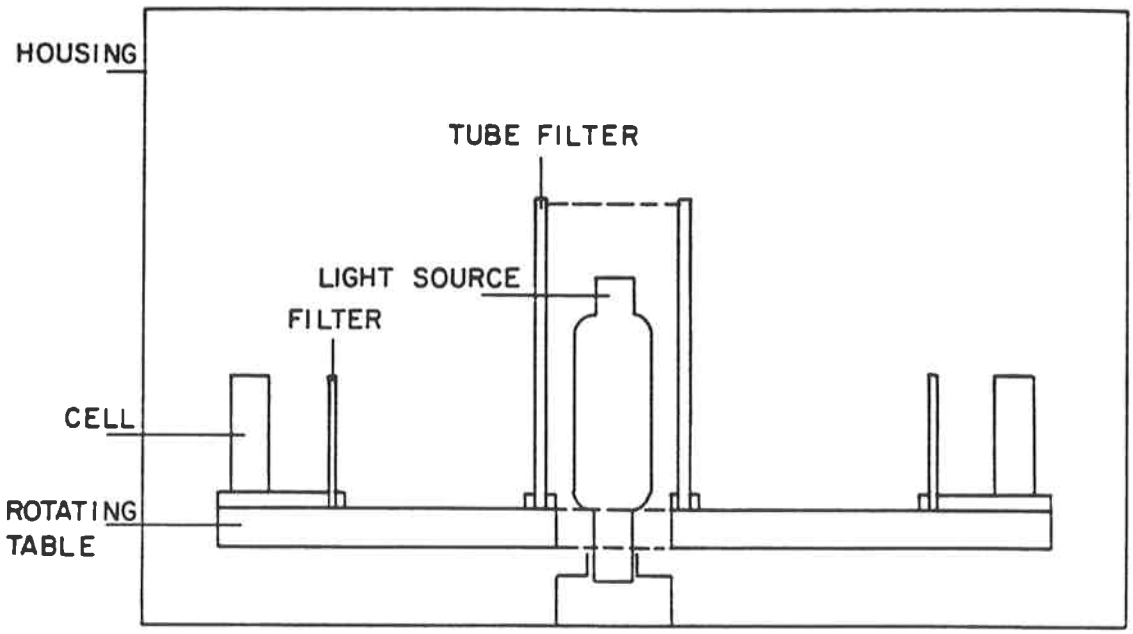

FIG. 6: SCHEMATIC SET-UP OF ECETOC APPARATUS

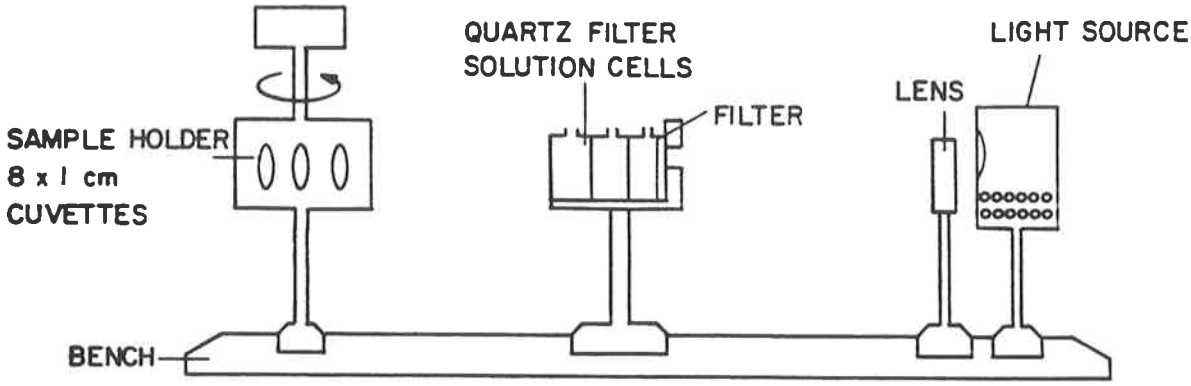

FIG. 7: SCHEMATIC SET-UP OF OPTICAL BENCH APPARATUS

G. BIBLIOGRAPHY

- Barltrop, J.A. and Coyle, J.D. (1975). Excited States in Organic Chemistry. John Wiley and Sons Inc., New York.

- Calvert, J.G. and Pitts, J.N.Jr.(1966). Photochemistry. J. Wiley, New York, p.783.

- Crossland, N.O. and Wolff, C.J.M. (1983). The fate and biological effects of pentachlorophenol in outdoor ponds. Accepted by Env. Toxicol. Chem. .

- ECETOC, Technical Report no.3 (1981). An Assessment of Test Methods for Photodegradation of Chemicals in the Environment.

- Johns, H.E. and Rauth, A.M.(1965). Theory and design of high intensity UV monochromators for photobiology and photochemistry. Photochem. Photobiol., 4, 673.

- Mill, T., Mabey, W.E., Bomberger, D.C., Chou, T.W., Hendry, D.G. and Smith, J.H.(1981). Laboratory protocols for evaluation of the fate of organic chemicals in air and water. Final Draft of SRI International report to U.S. Environmental Protection Agency.

- Miller, G.C., Mille, M.J., Crosby, D.G., Sontum, S. and Zepp, R.G.(1979). Photosolvolysis of 3,4-dichloroaniline in water. Evidence for an aryl cation intermediate. Tetrahedron, 35, 1797.

- Mo, T. and Green, A.E.S.(1974). A climatology of solar erythema dose. Photochem. Photobiol., 20, 483.

- Murow, S.L.(1973). Handbook of Photochemistry. M. Dekker Publ., New York, p.124.

- Parker, C.A.(1968). Photoluminescence of solutions. Elsevier Pub. Co., p. 128-192.

- Pitts, J.N. and Calvert, S.G.(1966). Photochemistry. John Wiley and Sons, Inc., New York.

- Taylor, H.A.(1971). Analytical photochemistry and photochemical analysis. Eds. Fitzgerald, J.A. et al., M. Dekker Publ., New York, p.91.

- West, M.A. (1973). Developments in instrumentation and techniques. Photochemistry, Vol.4. The Chemical Society. p.85-112.

- Wilmes, R.(1984). Extrapolation of laboratory experiments on photodegradation in water to environmental conditions. LUFA (Landwirtschaftliche Untersuchungs- und Forschungs Anstalten) Meeting, 28 Feb. 1984.

- Zepp, R.G. and Cline, D.M.(1977). Rates of direct photolysis in the aquatic environment. Env. Sci. and Technol., 11, 359.

H. MEMBERS OF THE TF-PHOTODEGRADATION-2

J.A. GUTH, Agricultural Division, Biochemistry Department, CIBA-GEIGY (Basel)

O. KLAIS, Applied Physics Dept., HOECHST (Frankfurt/Main)

J. LEAHEY, Jealott's Hill Research Station, ICI (Bracknell)

J. LEMAIRE, Laboratoire de Photochimie, Ensemble Scientifique des Céseaux, (University of Clermont-Ferrand)

W. MERZ, Department Environmental Protection, BASF (Ludwigshafen)

J. PHILP, Environmental Safety Division, UNILEVER (Colworth)

R. WILMES, Research Centre, BAYER (Wuppertal)

C.J.M. WOLFF, SHELL Laboratorium (Amsterdam)

I. PARTICIPANTS IN RING-TEST

ATOCHEM	M. Rooy
BASF	W. Merz
BAYER	R. Wilmes
CIBA-GEIGY	J.A. Guth
HENKEL	P. Jeschke
HOECHST	O. Klais
I.C.I.	J. Leahey
ISTITUTO GUIDO DONEGANI	M. Pieroni
SANDOZ	Z. Bidlo
SHELL	C.J.M. Wolff
SOLVAY	M. C. Biver
UNILEVER	J. Philp
UNIVERSITY OF CLERMONT-FERRAND	J. Lemaire

J. MEMBERS OF ECETOC SCIENTIFIC COMMITTEE

I. PURCHASE (Chairman), Director, Central Toxicity Laboratory	ICI (Alderley Park)
M. SHARRATT, (Vice-chairman), Senior Toxicologist	BP (Sunbury)
J. BÄCKSTROM, Consultant Toxicologist	ASSOCIATION OF SWEDISH CHEMICAL INDUSTRIES (Stockholm)
B. BROECKER, Coordinator, Product-related Environmental Problems	HOECHST (Frankfurt)
L. CAILLARD, Industrial Toxicological and Ecotoxicological Service	RHONE POULENC (Paris)
H.O. ESSER, Head of Biochemistry, Agrochemie Division	CIBA-GEIGY (Basel)
P. GELBKE, Head, Department of Toxicology	BASF (Ludwigshafen)
U. KORALLUS, Medical Director	BAYER (Leverkusen)
R. MATTIUSSI, Responsible for Medicine and Industrial Hygiene	MONTEDISON (Milan)
H.G. NOSLER, Head, Coord. Centre for Consumer Safety and Environmental Protection	HENKEL (Dusseldorf)
J.F. NEWMAN, Consultant to ICI	(Reading)
C.L.M. POELS, Environmental Affairs Division	SHELL (den Haag)
J.P. TASSIGNON, Counsellor, Direction Centrale Pharmacie	SOLVAY (Brussels)
W.F. TORDOIR, Head of Occupational Health and Toxicology Division	SHELL (den Haag)
H. VERSCHUUREN, Head, Department of Toxicology	DOW CHEMICAL (Horgen)

Responsible editor : L. Turner
Avenue Louise 250, Bte 63
B-1050 Brussels, Belgium.

D-1984-3001/23